HONDA

ACB125CBF

ACB125CBFH
ACB125CBFK
ACB125CBFL
ACB125CBFM
ACB125CBFN
ACB125CBFP

PDF

This Parts Catalogue is modified for website.

• When retrival of spare part number, please make sure to refer to "Part Catalog News" located at end of the book.
• WIth regards to part availablity and price, kindly consult with Authorized Honda dealership.

NOTICE This parts catalogue has "Parts Catalogue News". Please make sure to refer to "Parts Catalogue News" at end of book.

PARTS CATALOGUE

3

18K60H03

© Honda Motor Co., Ltd. 2022

FOREWORD INDEX 1

ENGINE GROUP 2

FRAME GROUP 3

PART NUMBER INDEX 4

PART NAME INDEX 5

Instruction for use of parts catalogue

- **This parts catalogue has been created as of October 10, 2022.**
  - Since this date, the sales practice for repair parts may have been changed or the parts may have been eliminated (listed for those not for sale).
  - The modified information is reflected on the latest Electronic Parts Catalogue (EPC).
    Also, refer to the parts catalogue news for any change.
  - See the parts catalogue news for any revision that is made after October 10, 2022.
- **Always specify the part number when ordering a part.**
  - Check the model, type, serial numbers, color, maker, and the size as needed before ordering a part.
  - Note that the illustrations (part drawings) can differ from the actual parts in shape.
    They are given just to help you to refer to the parts.
- **When modifications or additions to this parts catalogue are made, a revised edition will be issued at an appropriate time, with successively progressing revision numbers on the cover. We recommend obtaining such revisions in order to keep your parts catalogue up-to-date at all times. To check whether a parts catalogue revision has been issued, please contact your Honda distributor.**

Initial version issue date
February 01, 2017
Honda Motor Co., Ltd.

CONTENTS

Page

- Instruction for use of parts catalogue 1 (1)
- How to refer to the part information 2
- Part catalogue structure 3
- When the parts were revised 5
- Abbreviations used in the parts catalogue 5
- Part block and serial number check 6
- Models, parts catalogue codes and applicable serial numbers 7
- Color chart 8
- Fuel hose, general purpose hoses and vinyl hose 24
- FLAT RATE SERVICE TIME 28
- Illustrated index 33
- ENGINE GROUP 43 (2)
- FRAME GROUP 70 (3)
- PART NO. INDEX 150 (4)
- PART NAME INDEX 155 (5)

How to refer to the part information

Ⓐ Reference with “Illustrated index”

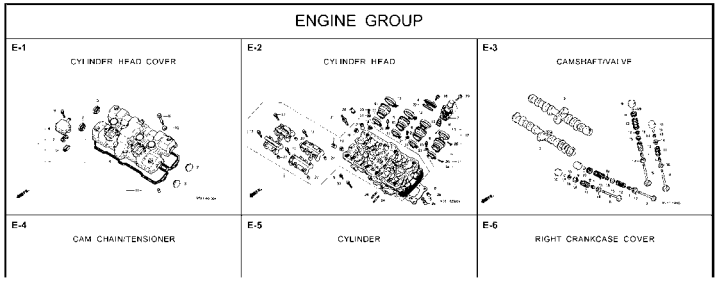

Ⓑ Reference with “Part number index”

PART NO. INDEX

Part Number	Page	Ref.
04000		
04911-MCE-000	26	1
06000		
06405-MY5-P00	67	3
06405-MY5-P10	67	3
06410-MY9-860	56	1
06435-MCE-006	55	1
06451-166-405	51	2
06451-443-405	55	2
06451-MA7-405	51	1
06455-MCE-006	51	3
11000		
11210-MCE-000	25	1
11330-MCE-305	18	1
11333-KT8-000	22	1
11335-MCE-000	18	2
11360-MCE-000	23	1
11365-MCE-000	23	2
11396-MY9-000	18	3
11631-MCE-000	21	1
11691-MY9-000	21	2
13323-MY9-751	28	10
13324-MY9-751	28	10
13325-MY9-751	28	10
13327-MY9-751	28	10
14000		
14100-MCE-000	13	2
14200-MCE-000	13	3
14321-MCE-000	16	2
14401-MCE-003	16	3
14510-MBE-000	16	4
14520-MY9-691	16	5
14524-MY9-690	16	6
14546-MCE-000	16	7
14620-MY9-691	16	8
14711-MCE-000	13	4
14712-MCE-000	13	5
14721-MCE-000	13	6
14722-MCE-000	13	7
14730-MCE-000	13	8
14731-MCE-000	13	9
14731-MY9-751	13	10
14751-KY2-000	13	11
14751-MCE-000	13	12
14761-MCE-000	13	13

Ⓒ Reference with “Part name index”

PART NAME INDEX

Part name	Page	Ref.
[A]		
ADJUSTER, CHAIN	67	5
ARM COMP., GEAR CHANGE	64	3
ARM, L. MAIN STEP	65	8
ARM, L. PILLION STEP	65	12
ARM, R. MAIN STEP	65	5
ARM, R. PILLION STEP	65	11
AUTO COCK ASSY., FUEL	58	2
AXLE, FR. WHEEL	52	3
AXLE, RR. WHEEL	56	3
[B]		
BAG, AIR PRESSURE GAUGE	77	4
BAG, SERVICE BOOK	77	1
BAG, TOOL	77	3
BALL, STEEL,	65	20
BAND A, INSULATOR	11	11
BAND B, INSULATOR	11	12
BAND, AIR CLEANER CONNECTING TUBE	62	22
BAND, U-LOCK	70	3
BAND, WIRE	26	14
	43	21
	74	18
BOLT, CHANGE		
BOLT, CLUTCH		
BOLT, CONNECT		
BOLT, DISK, C		
BOLT, DISK, E		
BOLT, DRAIN F		
BOLT, FLANGE		
BOLT, FLANGE,		
BOLT, FLANGE,		
BOLT, FLANGE,		
BOLT, FLANGE,		
BOLT, FLANGE,		
BOLT, FLANGE,		
BOLT, FLANGE,		
BOLT, FLANGE,		

F-7 FRONT FENDER

Block No.

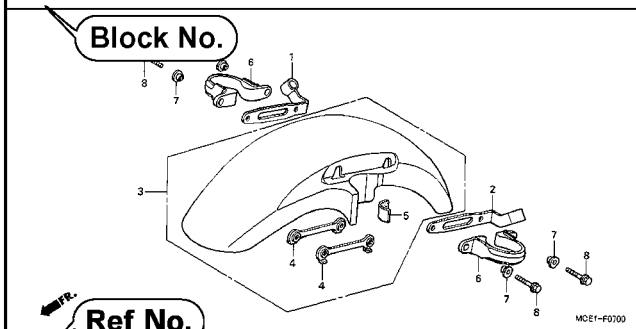

Service item	F.R.T.
FENDER COMP., FR.	0.3

Ref. No.

Ref. No.	Part No.	Description	Reqd. QTY CB400 SFX	Reqd. QTY CB400 SFY	Serial No.	Parts catalogue code
1	45156-MCE-000	CLAMPER, R. FR. BRAKE HOSE	1	1		
2	45157-MCE-000	CLAMPER, L. FR. BRAKE HOSE	1	1		
3	61100-MCE-000ZA	FENDER COMP., FR. *NH411M*FORCE SILVER METALLIC	1	-	-------- --------	3J,4J
			-	1		
	61100-MCE-000ZB	*PB284C*...CANDY PHOENIX BLUE	1	-	-------- --------	J,2J
4	61101-MCE-000	PLATE, FR. FENDER	2	2	-------- 1008000	
	61101-MCE-010		2	2	1008001	
5	61102-MCE-300	CUSHION, FR. FENDER (BLACK)	2	2		
6	61105-MCE-000	STAY, FR. FENDER MOUNTING	2	2		
7	61107-MR7-000	COLLAR (6.5)	4	4		
8	96001-06020-00	BOLT, FLANGE, 6X20	4	4		

49

Page No.

2000.09.01 E

Part catalogue structure

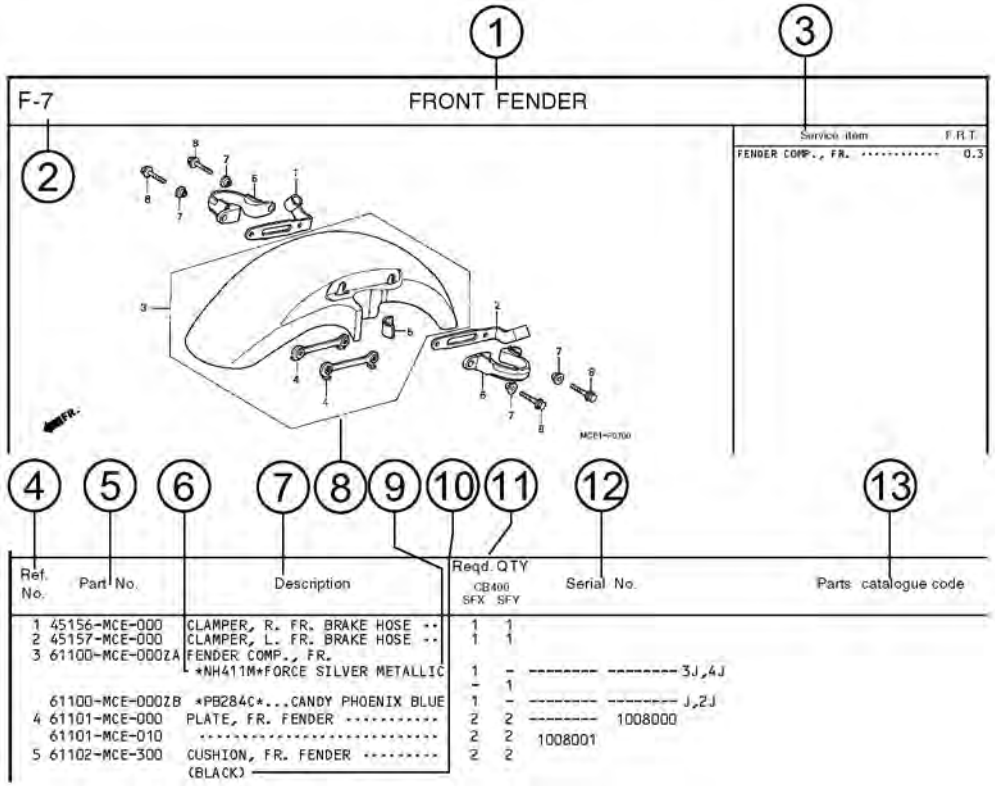

①Block title ②Block number

③Service item/Flat rate time

④Reference number

- Title number marked with the parenthesis or parentheses indicates that it continues from the previous page.

⑤Part number ⑥Honda color code

⑦Description

⑧Assemblies

- Sections framed with broken lines in the exploded view drawings are available as complete assemblies. (Their individual parts can also be obtained.)

⑨Color description

⑩Note

- Notes are shown with the parentheses in the part name column.

⑪Required quantity

- Reqd. QTY shown in the parenthesis or parentheses indicates the optional part.
- Reqd. QTY marked with “N” indicates the optional part that should be selected as needed.
- Reqd. QTY indicates the number of the part used in the block.

⑫Serial number

⑬Parts catalogue code

- When the parts catalogue code column is blank, it indicates that the part is applicable to all codes.

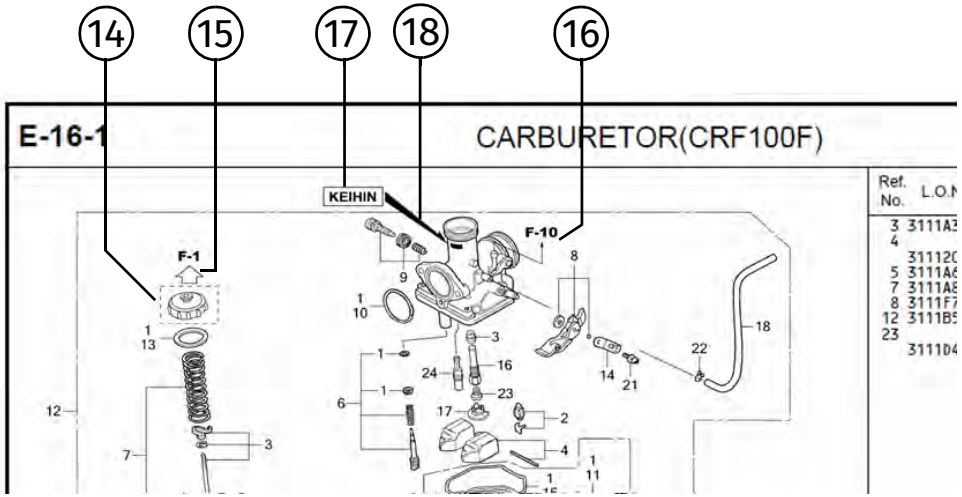

⑭ ⬚

- Parts enclosed within a dotted line ⬚ are covered in a different block.

⑮ ⇦

- A hollow arrow ⇦ indicates the block No. for the parts enclosed within a dotted line ⬚ .

⑯ ←

- A solid arrow ← indicates the block No. the part in question is connected to.

⑰Replacement Identification Information for Designated Part No.

⑱Location of Replacement Identification Information for Designated Part No.

- If an arrow mark is indicated in 18, the part is incompatible with a different part No.
- Make sure to order the part of the same manufacture, including the component part.
- To make an order, indicate the part No., which includes the symbol displayed on the applicable section of the part to be replaced.

When the parts were revised

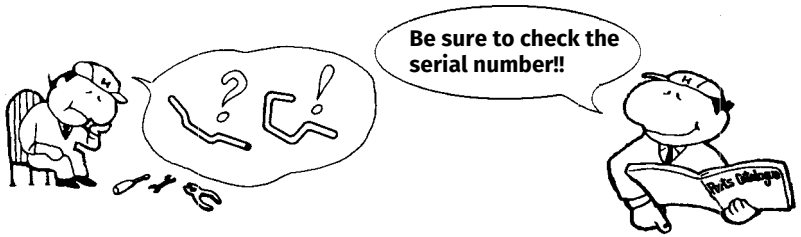

Ref. No.	Part No.	Description	Reqd. QTY CB400 SFX	Reqd. QTY CB400 SFY	Serial No.
1	45156-MCE-000	CLAMPER, R. FR. BRAKE HOSE ··	1	1	
2	45157-MCE-000	CLAMPER, L. FR. BRAKE HOSE ··	1	1	
3	61100-MCE-000ZA	FENDER COMP., FR. *NH411M*FORCE SILVER METALLIC	1	-	-------- --------3J,4J
			-	1	
	61100-MCE-000ZB	*PB284C*...CANDY PHOENIX BLUE	1	-	-------- --------J,2J
4	61101-MCE-000	PLATE, FR. FENDER (###)·····	2	2	-------- 1008000
	61101-MCE-010	·····	2	2	1008001
5	61102-MCE-300	CUSHION, FR. FENDER ····· (BLACK)	2	2	
6	61105-MCE-000	STAY, FR. FENDER MOUNTING ···	2	2	
7	61107-MR7-000	COLLAR (6.5) ·····	4	4	
8	96001-06020-00	BOLT, FLANGE, 6X20 ·····	4	4	

The number has been used from the initial model without revision.

When shown at the left side, it is applicable to the models of No.1008001 and the subsequent numbers.

When shown at the right side, it is applicable to the models up to No.1008000.

• The parts listed with "###" at the end of the parts name have limited supply period (parts not for sale).

Abbreviations used in the parts catalogue

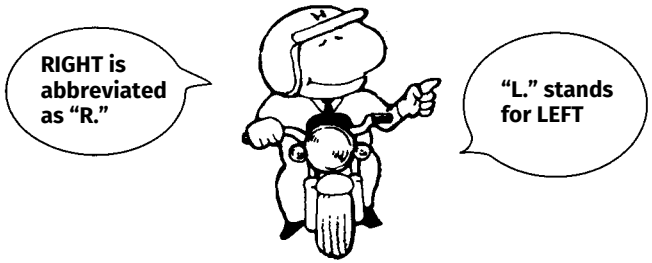

* "L." or "R." in the description of a part stands for the LEFT hand side or the RIGHT hand side. Determine the left or right as if you were in the motorcycle seat.

• **The following abbreviations are used in this parts catalogue.**

A ..... Ampere
ABS ..... Anti-lock brake system
A.C. ..... Alternating current
A.M. ..... Attaching mark
ASSY. ..... Assembly
C.D.I. ..... Capacitive discharge ignition
COMP. ..... Complete
CP. ..... Candle power
D.C. ..... Direct current
EX. ..... Exhaust
FR. ..... Front
G ..... Gram
HEX. ..... Hexagonal
IN. ..... Inlet
KPH ..... Kilometers per hour
L. ..... Left
L (100L) ... Link (100 Links)
L.E.D. ..... Light emitted diode
MM ..... Millimeter
MPH ..... Miles per hour
R. ..... Right
RR. ..... Rear
STD. ..... Standard
T (22T) ..... Tooth (22 Teeth)
TCS ..... Traction control system
T.M. ..... Transcript mark
V ..... Volt
W ..... Watt
WL ..... With labelling
WOL ..... Without labelling

Part block and serial number check

Part block	Engine parts E-2~	Throttle body parts E-22	Frame parts F-1~
Required serial number	Engine serial number	Throttle body serial number	Frame serial number
Check point	①	②	③

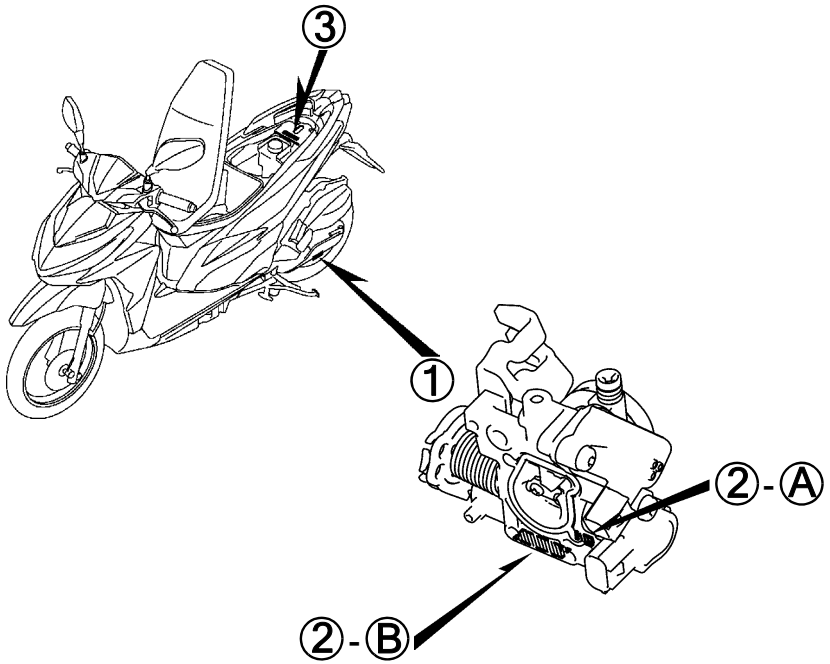

Models, parts catalogue codes and applicable serial numbers

Models, parts catalogue codes and applicable serial Nos. given in this parts catalogue can be identified as follows.
Parts with parts catalogue codes are exclusive for models destined for countries designated.
If no area codes are listed, parts are for common use.

Model	Parts catalogue code	Type	Applicable engine serial No.	Applicable frame serial No.	Applicable throttle body serial No.
ACB125CBFH	PH	Philippines	JA46E7000001~	MH1JA467*HK000001~HK099999	GQYRA A
ACB125CBFK	PH	Philippines	JA46E7000001~	MH1JA467*KK000001~KK099999	GQYKB A
ACB125CBFL	PH	Philippines	JA46E7000001~	MH1JA467*LK000001~	GQYKB A
ACB125CBFM	PH	Philippines	JA46E7000001~	MH1JA467*MK000001~	GQYKB A
ACB125CBFN	PH	Philippines	JA46E7000001~	MH1JA467*NK000001~	GQYKB A
ACB125CBFP	2PH	Philippines	K2VJ0E0000001~	K2VJ0000001~	GQYKB A

* Of carburetor/throttle body identification numbers, only the portions underlined in the example below are used for registration.

GQ YRA A KC ア
Ⓐ Ⓑ

Color chart

- When ordering a colored part, refer to the chart below and use a part number consisting of the relevant basic part number to which has been added a part color code.

ACB125CBF (ACB125CBFH)

No.	MODEL		ACB125CBFH							
	COLOR		Black	Ross white	Affinity black metallic	Winning red	Applicable model		Applicable block No.	Ref. No.
	CODE		NH-1	NH-196	NH-B12M	R-258				
No.	Name of colored parts	Basic part No.	NH1	NH196	NHB12	R258	Initial applicable model	Final applicable model		
1	BASE SET, LICENSE LIGHT	80110-K59-A10	ZA	ZA	ZA	ZA			F-39	10
2	COVER SET, FR.	64300-K60-H40	ZB	ZA	ZC	ZD			F-12	1
3	COVER SET, HANDLE TOP	53201-K59-A10	ZA	ZA	ZA	ZA			F-9	3
4	COVER SET, L. BODY	83550-K60-H40	ZE	ZB	ZD	ZA			F-15	4
5	COVER SET, L. FR.	64600-K60-H40	ZE	ZB	ZD	ZA			F-12	5
6	COVER SET, R. BODY	83450-K60-H40	ZE	ZB	ZD	ZA			F-15	2
7	COVER SET, R. FR.	64500-K60-H40	ZE	ZB	ZD	ZA			F-12	4
8	COVER SET, SPEEDOMETER	53280-K60-B00	ZD	ZD	ZD	ZD			F-9	6
9	COVER, CENTER	80151-K59-A10	ZB	ZB	ZB	ZB			F-15	1
10	COVER, FR. LOWER	64308-K59-A10	ZB	ZB	ZB	ZB			F-14	1
11	COVER, FR. TOP	64302-K60-T00	ZP	ZP	ZP	ZP			F-12	2
12	COVER, HANDLE FR.	53205-K59-A10	ZB	ZB	ZB	ZB			F-9	4
13	COVER, HANDLE RR.	53206-K60-B00	ZB	ZB	ZB	ZB			F-9	5
14	COVER, INNER LOWER	81141-K59-A10	ZB	ZB	ZB	ZB			F-12	8
15	COVER, L. BODY SIDE	83620-K59-A10	ZB	ZB	ZB	ZB			F-15	5
16	COVER, R. BODY SIDE	83520-K59-A10	ZB	ZB	ZB	ZB			F-15	3
17	COVER, RACK	81131-K59-A10	ZJ	ZJ	ZJ	ZJ			F-12	6
18	COVER, RR. CENTER	83750-K59-A10	ZM	ZM	ZM	ZM			F-15	6
19	COVER, UNDER	64340-K59-A10	ZB	ZB	ZB	ZB			F-14	3
20	FENDER SET, FR.	61110-K60-H40	ZC	ZB	ZD	ZB			F-11	1

ACB125CBF (ACB125CBFH)

No.	MODEL		ACB125CBFH							
	COLOR		Black	Ross white	Affinity black metallic	Winning red	Applicable model		Applicable block No.	Ref. No.
	CODE		NH-1	NH-196	NH-B12M	R-258				
No.	Name of colored parts	Basic part No.	NH1	NH196	NHB12	R258	Initial applicable model	Final applicable model		
21	GARNISH, FR.	64303-K59-A10	ZA	ZA	ZA	ZA			F-12	3
22	HOOK, LUGGAGE	81132-GAH-000	YV	YV	YV	YV			F-12	7
23	LID, BATTERY	64460-K59-A10	ZB	ZB	ZB	ZB			F-14	4
24	MARK	86531-KYZ-710	ZA	ZA	ZA	ZA			F-48	3
25	MARK	86611-K59-A00	ZD	-	ZE	-			F-48	4
26	MARK	86611-K60-H40	-	ZA	-	ZA			F-48	4
27	MARK, HONDA	86101-KZR-600	ZB	ZB	ZB	ZB			F-48	1
28	MARK, HONDA	86811-K20-900	ZB	ZB	ZB	ZB			F-48	9
29	PLUG, HOLE	90656-GCC-000	ZE	ZE	ZE	ZE			F-24	14
30	RAIL, RR. GRAB	84100-K59-A10	ZE	ZE	ZE	ZE			F-24	10
31	STEP, FLOOR	64310-K59-A10	ZB	ZB	ZB	ZB			F-14	2
32	STRIPE A, L. FR. COVER	86643-K60-H40	ZC	ZB	ZD	ZA			F-48	7
33	STRIPE A, R. FR. COVER	86642-K60-H40	ZC	ZB	ZD	ZA			F-48	6
34	STRIPE B, FR. COVER	86644-K60-H40	ZC	ZB	ZD	ZA			F-48	8
35	STRIPE, FR. COVER	86641-K60-H40	ZB	ZA	ZC	ZD			F-48	5
36	STRIPE, L. BODY COVER	86832-K60-H40	ZC	ZB	ZD	ZA			F-48	11
37	STRIPE, R. BODY COVER	86831-K60-H40	ZC	ZB	ZD	ZA			F-48	10
38	WHEEL SUB ASSY., FR.	44650-K59-A10	ZA	ZA	ZA	ZA			F-20-40	6
39	WHEEL SUB ASSY., RR.	42650-K59-A10	ZA	ZA	ZA	ZA			F-22-30	2

ACB125CBF (ACB125CBFK)

No.	MODEL		ACB125CBFK							
	COLOR		Vivid blue metallic	Anchor gray metallic-u	Space magenta metallic	Nitric orange	Applicable model		Applicable block No.	Ref. No.
	CODE		B-210M	NH-229M-U	RP-195M	YR-271				
	Name of colored parts	Basic part No.	B210	NH229	RP195	YR271	Initial applicable model	Final applicable model		
1	BRACKET, RR. FENDER	50186-K59-A70	ZA	ZA	ZA	ZA			F-39-1	3
2	CAP, TAIL	18306-K59-A70	ZA	ZA	ZA	ZA			F-30-1	4
3	COVER COMP., HANDLE RR.	53280-K59-A70	ZB	ZB	ZB	ZB			F-9-1	4
4	COVER SET, FR. TOP	64200-K60-H50	ZE	ZE	ZE	ZE			F-12-1	1
5	COVER SET, HANDLE FR.	53290-K59-A70	ZA	ZA	ZA	ZA			F-9-1	5
6	COVER SET, L. BODY	83550-K60-H50	ZC	ZD	ZA	ZB			F-15-1	6
7	COVER SET, L. FR.	64600-K60-H50	ZC	ZD	ZA	ZB			F-12-1	7
8	COVER SET, R. BODY	83450-K60-H50	ZC	ZD	ZA	ZB			F-15-1	4
9	COVER SET, R. FR.	64500-K60-H50	ZC	ZD	ZA	ZB			F-12-1	6
10	COVER, CENTER	80151-K59-A70	ZD	ZD	ZD	ZD			F-15-1	3
11	COVER, FR.	64301-K59-A70	ZT	ZU	ZN	ZK			F-12-1	2
12	COVER, FR. LOWER	64308-K59-A70	ZB	ZB	ZB	ZB			F-14-1	1
13	COVER, HANDLE FR. TOP	53208-K59-A70	ZT	ZU	ZS	ZR			F-9-1	3
14	COVER, INNER LOWER	81141-K60-B60	ZA	ZA	ZA	ZA			F-12-1	10
15	COVER, L. BODY SIDE	83620-K59-A70	ZB	ZB	ZB	ZB			F-15-1	7
16	COVER, L. UNDER SIDE	64360-K60-B60	ZB	ZB	ZB	ZB			F-15-1	2
17	COVER, R. BODY SIDE	83520-K59-A70	ZB	ZB	ZB	ZB			F-15-1	5
18	COVER, R. UNDER SIDE	64350-K60-B60	ZB	ZB	ZB	ZB			F-15-1	1
19	COVER, RACK	81131-K59-A70	ZT	ZU	ZN	ZK			F-12-1	8
20	COVER, RR. CENTER	83750-K59-A70	ZL	ZK	ZJ	ZH			F-15-1	8
21	COVER, RR. FENDER UPPER	80103-K59-A70	ZB	ZB	ZB	ZB			F-39-1	7
22	COVER, UNDER	64340-K59-A70	ZB	ZB	ZB	ZB			F-14-1	4
23	FENDER SET A, RR.	80100-K59-T10	ZA	ZA	ZA	ZA			F-39-1	4
24	FENDER SET, FR.	61110-K59-A70	ZA	ZB	ZN	ZJ			F-11	3
25	GARNISH, FR.	64303-K59-A70	ZD	ZD	ZD	ZD			F-12-1	3

ACB125CBF (ACB125CBFK)

No.	MODEL		ACB125CBFK							
	COLOR		Vivid blue metallic	Anchor gray metallic-u	Space magenta metallic	Nitric orange	Applicable model		Applicable block No.	Ref. No.
	CODE		B-210M	NH-229M-U	RP-195M	YR-271				
	Name of colored parts	Basic part No.	B210	NH229	RP195	YR271	Initial applicable model	Final applicable model		
26	GARNISH, L. FR.	64420-K59-A70	ZD	ZD	ZD	ZD			F-14-1	5
27	GARNISH, L. INNER	64430-K59-A70	ZC	ZC	ZC	ZC			F-12-1	5
28	GARNISH, R. FR.	64320-K59-A70	ZD	ZD	ZD	ZD			F-14-1	3
29	GARNISH, R. INNER	64330-K59-A70	ZC	ZC	ZC	ZC			F-12-1	4
30	HOOK, LUGGAGE	81132-GAH-000	YV	YV	YV	YV			F-12-1	9
31	LID, BATTERY	64460-K59-A70	ZB	ZB	ZB	ZB			F-14-1	6
32	MARK	86531-KYZ-710	ZA	ZA	ZA	ZA			F-48-1	4
33	MARK	86611-K59-A70	ZA	ZB	ZL	ZJ			F-48-1	5
34	MARK, HONDA	86101-K93-N00	ZE	ZE	ZE	ZE			F-48-1	1
35	MARK, HONDA	86102-KZR-700	ZA	ZA	ZA	ZA			F-48-1	2
36	PLUG, HOLE	90656-GCC-000	ZE	ZE	ZE	ZE			F-24	14
37	RAIL, RR. GRAB	84100-K59-A70	ZJ	ZJ	ZK	ZK			F-24	10
38	STEP, FLOOR	64310-K59-A70	ZB	ZB	ZB	ZB			F-14-1	2
39	STRIPE A, L. FR. COVER	86642-K60-H50	ZC	ZD	ZA	ZB			F-48-1	7
40	STRIPE A, R. FR. COVER	86641-K60-H50	ZC	ZD	ZA	ZB			F-48-1	6
41	STRIPE B, FR. COVER	86643-K60-H50	ZC	ZD	ZA	ZB			F-48-1	8
42	STRIPE, L. BODY COVER	86832-K60-H50	ZC	ZD	ZA	ZB			F-48-1	10
43	STRIPE, R. BODY COVER	86831-K60-H50	ZC	ZD	ZA	ZB			F-48-1	9
44	WHEEL SUB ASSY., FR.	44650-K59-A10	ZA	ZA	ZA	ZA			F-20-40	6
45	WHEEL SUB ASSY., RR.	42650-K59-A10	ZA	ZA	ZA	ZA			F-22-30	2

ACB125CBF (ACB125CBFL)

No.	MODEL		ACB125CBFL							
	COLOR		Vivid blue metallic	Mat gunpowder black metallic	Valiant red	Nitric orange	Applicable model		Applicable block No.	Ref. No.
	CODE		B-210M	NH-436M	R-383	YR-271				
No.	Name of colored parts	Basic part No.	B210	NH436	R383	YR271	Initial applicable model	Final applicable model		
1	BRACKET, RR. FENDER	50186-K59-A70	ZA	ZA	ZA	ZA			F-39-1	3
2	CAP, TAIL	18306-K59-A70	ZA	ZA	ZA	ZA			F-30-1	4
3	COVER COMP., HANDLE RR.	53280-K59-A70	ZB	ZB	ZB	ZB			F-9-1	4
4	COVER SET, FR. TOP	64200-K60-H50	ZE	ZE	ZE	ZE			F-12-1	1
5	COVER SET, HANDLE FR.	53290-K59-A70	ZA	ZA	ZA	ZA			F-9-1	5
6	COVER SET, L. BODY	83550-K60-H70	ZC	ZD	ZB	ZA			F-15-1	6
7	COVER SET, L. FR.	64600-K60-H70	ZC	ZD	ZB	ZA			F-12-1	7
8	COVER SET, R. BODY	83450-K60-H70	ZC	ZD	ZB	ZA			F-15-1	4
9	COVER SET, R. FR.	64500-K60-H70	ZC	ZD	ZB	ZA			F-12-1	6
10	COVER, CENTER	80151-K59-A70	ZD	ZD	ZD	ZD			F-15-1	3
11	COVER, FR.	64301-K59-A70	ZT	ZC	YB	ZK			F-12-1	2
12	COVER, FR. LOWER	64308-K59-A70	ZB	ZB	ZB	ZB			F-14-1	1
13	COVER, HANDLE FR. TOP	53208-K59-A70	ZT	ZC	YB	ZR			F-9-1	3
14	COVER, INNER LOWER	81141-K60-B60	ZA	ZA	ZA	ZA			F-12-1	10
15	COVER, L. BODY SIDE	83620-K59-A70	ZB	ZB	ZB	ZB			F-15-1	7
16	COVER, L. UNDER SIDE	64360-K60-B60	ZB	ZB	ZB	ZB			F-15-1	2
17	COVER, R. BODY SIDE	83520-K59-A70	ZB	ZB	ZB	ZB			F-15-1	5
18	COVER, R. UNDER SIDE	64350-K60-B60	ZB	ZB	ZB	ZB			F-15-1	1
19	COVER, RACK	81131-K59-A70	YA	YA	YA	YA			F-12-1	8
20	COVER, RR. CENTER	83750-K59-A70	ZD	ZD	ZD	ZD			F-15-1	8
21	COVER, RR. FENDER UPPER	80103-K59-A70	ZB	ZB	ZB	ZB			F-39-1	7
22	COVER, UNDER	64340-K59-A70	ZB	ZB	ZB	ZB			F-14-1	4
23	FENDER SET A, RR.	80100-K59-T10	ZA	ZA	ZA	ZA			F-39-1	4
24	FENDER SET, FR.	61110-K59-A70	ZA	-	-	-			F-11	3
25	FENDER SET, FR.	61110-K59-A80	-	ZF	ZD	ZE			F-11	3

ACB125CBF (ACB125CBFL)

No.	MODEL		ACB125CBFL							
	COLOR		Vivid blue metallic	Mat gunpowder black metallic	Valiant red	Nitric orange	Applicable model		Applicable block No.	Ref. No.
	CODE		B-210M	NH-436M	R-383	YR-271				
	Name of colored parts	Basic part No.	B210	NH436	R383	YR271	Initial applicable model	Final applicable model		
26	GARNISH, FR.	64303-K59-A70	ZD	ZD	ZD	ZD			F-12-1	3
27	GARNISH, L. FR.	64420-K59-A70	ZD	ZD	ZD	ZD			F-14-1	5
28	GARNISH, L. INNER	64430-K59-A70	ZC	ZC	ZC	ZC			F-12-1	5
29	GARNISH, R. FR.	64320-K59-A70	ZD	ZD	ZD	ZD			F-14-1	3
30	GARNISH, R. INNER	64330-K59-A70	ZC	ZC	ZC	ZC			F-12-1	4
31	HOOK, LUGGAGE	81132-GAH-000	YV	YV	YV	YV			F-12-1	9
32	LID, BATTERY	64460-K59-A70	ZB	ZB	ZB	ZB			F-14-1	6
33	MARK	86531-KYZ-710	ZA	ZA	ZA	ZA			F-48-1	4
34	MARK	86611-K59-A70	ZA	-	-	-			F-48-1	5
35	MARK	86611-K59-A80	-	ZF	ZG	ZE			F-48-1	5
36	MARK, HONDA	86101-K93-N00	ZE	ZE	ZE	ZE			F-48-1	1
37	MARK, HONDA	86102-KZR-700	ZA	ZA	ZA	ZA			F-48-1	2
38	PLUG, HOLE	90656-GCC-000	ZE	ZE	ZE	ZE			F-24	14
39	RAIL, RR. GRAB	84100-K59-A70	ZH	ZH	ZH	ZH			F-24	10
40	STEP, FLOOR	64310-K59-A70	ZB	ZB	ZB	ZB			F-14-1	2
41	STRIPE A, L. FR. COVER	86642-K60-H70	ZC	ZD	ZB	ZA			F-48-1	12
42	STRIPE A, R. FR. COVER	86641-K60-H70	ZC	ZD	ZB	ZA			F-48-1	11
43	STRIPE B, L. FR. COVER	86643-K60-H70	ZC	ZD	ZB	ZA			F-48-1	13
44	STRIPE, L. BODY COVER	86832-K60-H70	ZC	ZD	ZB	ZA			F-48-1	15
45	STRIPE, R. BODY COVER	86831-K60-H70	ZC	ZD	ZB	ZA			F-48-1	14
46	WHEEL SUB ASSY., FR.	44650-K59-A10	ZA	ZA	ZA	ZA			F-20-40	6
47	WHEEL SUB ASSY., RR.	42650-K59-A10	ZA	ZA	ZA	ZA			F-22-30	2

ACB125CBF (ACB125CBFM)

No.	MODEL		ACB125CBFM							
	COLOR		Vivid blue metallic	Mat gunpowder black metallic	Valiant red	Nitric orange	Applicable model		Applicable block No.	Ref. No.
	CODE		B-210M	NH-436M	R-383	YR-271				
No.	Name of colored parts	Basic part No.	B210	NH436	R383	YR271	Initial applicable model	Final applicable model		
1	BRACKET, RR. FENDER	50186-K59-A70	ZA	ZA	ZA	ZA			F-39-1	3
2	CAP, TAIL	18306-K59-A70	ZA	ZA	ZA	ZA			F-30-1	4
3	COVER COMP., HANDLE RR.	53280-K59-A70	ZB	ZB	ZB	ZB			F-9-1	4
4	COVER SET, FR. TOP	64200-K60-H50	ZE	ZE	ZE	ZE			F-12-1	1
5	COVER SET, HANDLE FR.	53290-K59-A70	ZA	ZA	ZA	ZA			F-9-1	5
6	COVER SET, L. BODY	83550-K60-HA0	ZC	ZD	ZB	ZA			F-15-1	6
7	COVER SET, L. FR.	64600-K60-HA0	ZC	ZD	ZB	ZA			F-12-1	7
8	COVER SET, R. BODY	83450-K60-HA0	ZC	ZD	ZB	ZA			F-15-1	4
9	COVER SET, R. FR.	64500-K60-HA0	ZC	ZD	ZB	ZA			F-12-1	6
10	COVER, CENTER	80151-K59-A70	ZD	ZD	ZD	ZD			F-15-1	3
11	COVER, FR.	64301-K59-A70	ZT	ZC	YB	ZK			F-12-1	2
12	COVER, FR. LOWER	64308-K59-A70	ZB	ZB	ZB	ZB			F-14-1	1
13	COVER, HANDLE FR. TOP	53208-K59-A70	ZT	ZC	YB	ZR			F-9-1	3
14	COVER, INNER LOWER	81141-K60-B60	ZA	ZA	ZA	ZA			F-12-1	10
15	COVER, L. BODY SIDE	83620-K59-A70	ZB	ZB	ZB	ZB			F-15-1	7
16	COVER, L. UNDER SIDE	64360-K60-B60	ZB	ZB	ZB	ZB			F-15-1	2
17	COVER, R. BODY SIDE	83520-K59-A70	ZB	ZB	ZB	ZB			F-15-1	5
18	COVER, R. UNDER SIDE	64350-K60-B60	ZB	ZB	ZB	ZB			F-15-1	1
19	COVER, RACK	81131-K59-A70	YA	YA	YA	YA			F-12-1	8
20	COVER, RR. CENTER	83750-K59-A70	ZD	ZD	ZD	ZD			F-15-1	8
21	COVER, RR. FENDER UPPER	80103-K59-A70	ZB	ZB	ZB	ZB			F-39-1	7
22	COVER, UNDER	64340-K59-A70	ZB	ZB	ZB	ZB			F-14-1	4
23	FENDER SET A, RR.	80100-K59-T10	ZA	ZA	ZA	ZA			F-39-1	4
24	FENDER SET, FR.	61110-K59-HA0	ZC	ZD	ZB	ZA			F-11	3
25	GARNISH, FR.	64303-K59-A70	ZD	ZD	ZD	ZD			F-12-1	3

ACB125CBF (ACB125CBFM)

No.	MODEL		ACB125CBFM							
	COLOR		Vivid blue metallic	Mat gunpowder black metallic	Valiant red	Nitric orange	Applicable model		Applicable block No.	Ref. No.
	CODE		B-210M	NH-436M	R-383	YR-271				
	Name of colored parts	Basic part No.	B210	NH436	R383	YR271	Initial applicable model	Final applicable model		
26	GARNISH, L. FR.	64420-K59-A70	ZD	ZD	ZD	ZD			F-14-1	5
27	GARNISH, L. INNER	64430-K59-A70	ZC	ZC	ZC	ZC			F-12-1	5
28	GARNISH, R. FR.	64320-K59-A70	ZD	ZD	ZD	ZD			F-14-1	3
29	GARNISH, R. INNER	64330-K59-A70	ZC	ZC	ZC	ZC			F-12-1	4
30	HOOK, LUGGAGE	81132-GAH-000	YV	YV	YV	YV			F-12-1	9
31	LID, BATTERY	64460-K59-A70	ZB	ZB	ZB	ZB			F-14-1	6
32	MARK	86531-KYZ-710	ZA	ZA	ZA	ZA			F-48-1	4
33	MARK	86611-K59-A70	ZA	-	-	-			F-48-1	5
34	MARK	86611-K59-A80	-	ZF	ZG	ZE			F-48-1	5
35	MARK, HONDA	86101-K93-N00	ZE	ZE	ZE	ZE			F-48-1	1
36	MARK, HONDA	86102-KZR-700	ZA	ZA	ZA	ZA			F-48-1	2
37	PLUG, HOLE	90656-GCC-000	ZE	ZE	ZE	ZE			F-24	14
38	RAIL, RR. GRAB	84100-K59-A70	ZH	ZH	ZH	ZH			F-24	10
39	STEP, FLOOR	64310-K59-A70	ZB	ZB	ZB	ZB			F-14-1	2
40	STRIPE A, L. FR. COVER	86642-K60-HA0	ZC	ZD	ZB	ZA			F-48-1	17
41	STRIPE A, R. FR. COVER	86641-K60-HA0	ZC	ZD	ZB	ZA			F-48-1	16
42	STRIPE B, L. FR. COVER	86643-K60-HA0	ZC	ZD	ZB	ZA			F-48-1	18
43	STRIPE, L. BODY COVER	86832-K60-HA0	ZC	ZD	ZB	ZA			F-48-1	20
44	STRIPE, R. BODY COVER	86831-K60-HA0	ZC	ZD	ZB	ZA			F-48-1	19
45	WHEEL SUB ASSY., FR.	44650-K59-A10	ZA	ZA	ZA	ZA			F-20-40	6
46	WHEEL SUB ASSY., RR.	42650-K59-A10	ZA	ZA	ZA	ZA			F-22-30	2

ACB125CBF (ACB125CBFN)

No.	MODEL		ACB125CBFN							
	COLOR		Vivid blue metallic	Mat gunpowder black metallic	Mat pearl crater white	Valiant red	Applicable model		Applicable block No.	Ref. No.
	CODE		B-210M	NH-436M	NH-C51P	R-383				
	Name of colored parts	Basic part No.	B210	NH436	NHC51	R383	Initial applicable model	Final applicable model		
1	BRACKET, RR. FENDER	50186-K59-A70	ZA	ZA	ZA	ZA			F-39-1	3
2	CAP, TAIL	18306-K59-A70	ZA	ZA	ZA	ZA			F-30-1	4
3	COVER COMP., HANDLE RR.	53280-K59-A70	ZB	ZB	ZB	ZB			F-9-1	4
4	COVER SET, FR. TOP	64200-K60-H50	ZE	ZE	ZE	ZE			F-12-1	1
5	COVER SET, HANDLE FR.	53290-K59-A70	ZA	ZA	ZA	ZA			F-9-1	5
6	COVER SET, L. BODY	83550-K2V-H00	ZD	ZE	ZA	ZC			F-15-1	6
7	COVER SET, L. FR.	64600-K2V-H00	ZD	ZE	ZA	ZC			F-12-1	7
8	COVER SET, R. BODY	83450-K2V-H00	ZD	ZE	ZA	ZC			F-15-1	4
9	COVER SET, R. FR.	64500-K2V-H00	ZD	ZE	ZA	ZC			F-12-1	6
10	COVER, CENTER	80151-K59-A70	ZD	ZD	ZD	ZD			F-15-1	3
11	COVER, FR.	64301-K59-A70	ZT	ZC	YK	YB			F-12-1	2
12	COVER, FR. LOWER	64308-K59-A70	ZB	ZB	ZB	ZB			F-14-1	1
13	COVER, HANDLE FR. TOP	53208-K59-A70	ZT	ZC	YJ	YB			F-9-1	3
14	COVER, INNER LOWER	81141-K60-B60	ZA	ZA	ZA	ZA			F-12-1	10
15	COVER, L. BODY SIDE	83620-K59-A70	ZB	ZB	ZB	ZB			F-15-1	7
16	COVER, L. UNDER SIDE	64360-K60-B60	ZB	ZB	ZB	ZB			F-15-1	2
17	COVER, R. BODY SIDE	83520-K59-A70	ZB	ZB	ZB	ZB			F-15-1	5
18	COVER, R. UNDER SIDE	64350-K60-B60	ZB	ZB	ZB	ZB			F-15-1	1
19	COVER, RACK	81131-K59-A70	YA	YA	YA	YA			F-12-1	8
20	COVER, RR. CENTER	83750-K59-A70	ZD	ZD	ZD	ZD			F-15-1	8
21	COVER, RR. FENDER UPPER	80103-K59-A70	ZB	ZB	ZB	ZB			F-39-1	7
22	COVER, UNDER	64340-K59-A70	ZB	ZB	ZB	ZB			F-14-1	4
23	FENDER SET A, RR.	80100-K59-T10	ZA	ZA	ZA	ZA			F-39-1	4
24	FENDER SET, FR.	61110-K2V-N10	ZB	ZC	ZE	ZG			F-11	3
25	GARNISH, FR.	64303-K59-A70	ZD	ZD	ZD	ZD			F-12-1	3

ACB125CBF (ACB125CBFN)

No.	MODEL		ACB125CBFN							
	COLOR		Vivid blue metallic	Mat gunpowder black metallic	Mat pearl crater white	Valiant red	Applicable model		Applicable block No.	Ref. No.
	CODE		B-210M	NH-436M	NH-C51P	R-383				
	Name of colored parts	Basic part No.	B210	NH436	NHC51	R383	Initial applicable model	Final applicable model		
26	GARNISH, L. FR.	64420-K59-A70	ZD	ZD	ZD	ZD			F-14-1	5
27	GARNISH, L. INNER	64430-K59-A70	ZC	ZC	ZC	ZC			F-12-1	5
28	GARNISH, R. FR.	64320-K59-A70	ZD	ZD	ZD	ZD			F-14-1	3
29	GARNISH, R. INNER	64330-K59-A70	ZC	ZC	ZC	ZC			F-12-1	4
30	HOOK, LUGGAGE	81132-GAH-000	YV	YV	YV	YV			F-12-1	9
31	LID, BATTERY	64460-K59-A70	ZB	ZB	ZB	ZB			F-14-1	6
32	MARK	86531-KYZ-710	ZA	ZA	ZA	ZA			F-48-1	4
33	MARK	86611-K2V-N10	-	-	ZA	-			F-48-1	5
34	MARK	86611-K59-A70	ZA	-	-	-			F-48-1	5
35	MARK	86611-K59-A80	-	ZF	-	ZG			F-48-1	5
36	MARK, HONDA	86101-K93-N00	ZE	ZE	ZE	ZE			F-48-1	1
37	MARK, HONDA	86102-KZR-700	ZA	ZA	ZA	ZA			F-48-1	2
38	PLUG, HOLE	90656-GCC-000	ZE	ZE	ZE	ZE			F-24	14
39	RAIL, RR. GRAB	84100-K59-A70	ZH	ZH	ZH	ZH			F-24	10
40	STEP, FLOOR	64310-K59-A70	ZB	ZB	ZB	ZB			F-14-1	2
41	STRIPE A, L. FR. COVER	86642-K2V-H00	ZD	ZE	ZA	ZC			F-48-1	22
42	STRIPE A, R. FR. COVER	86641-K2V-H00	ZD	ZE	ZA	ZC			F-48-1	21
43	STRIPE B, L. FR. COVER	86644-K2V-H00	ZD	ZE	ZA	ZC			F-48-1	24
44	STRIPE B, R. FR. COVER	86643-K2V-H00	ZD	ZE	ZA	ZC			F-48-1	23
45	STRIPE, L. BODY COVER	86832-K2V-H00	ZD	ZE	ZA	ZC			F-48-1	26
46	STRIPE, R. BODY COVER	86831-K2V-H00	ZD	ZE	ZA	ZC			F-48-1	25
47	WHEEL SUB ASSY., FR.	44650-K59-A10	ZA	ZA	ZA	ZA			F-20-40	6
48	WHEEL SUB ASSY., RR.	42650-K59-A10	ZA	ZA	ZA	ZA			F-22-30	2

ACB125CBF (ACB125CBFN)

No.	MODEL		ACB125CBFN				
	COLOR		Nitric orange	Applicable model		Applicable block No.	Ref. No.
	CODE		YR-271				
	Name of colored parts	Basic part No.	YR271	Initial applicable model	Final applicable model		
1	BRACKET, RR. FENDER	50186-K59-A70	ZA			F-39-1	3
2	CAP, TAIL	18306-K59-A70	ZA			F-30-1	4
3	COVER COMP., HANDLE RR.	53280-K59-A70	ZB			F-9-1	4
4	COVER SET, FR. TOP	64200-K60-H50	ZE			F-12-1	1
5	COVER SET, HANDLE FR.	53290-K59-A70	ZA			F-9-1	5
6	COVER SET, L. BODY	83550-K2V-H00	ZB			F-15-1	6
7	COVER SET, L. FR.	64600-K2V-H00	ZB			F-12-1	7
8	COVER SET, R. BODY	83450-K2V-H00	ZB			F-15-1	4
9	COVER SET, R. FR.	64500-K2V-H00	ZB			F-12-1	6
10	COVER, CENTER	80151-K59-A70	ZD			F-15-1	3
11	COVER, FR.	64301-K59-A70	ZK			F-12-1	2
12	COVER, FR. LOWER	64308-K59-A70	ZB			F-14-1	1
13	COVER, HANDLE FR. TOP	53208-K59-A70	ZR			F-9-1	3
14	COVER, INNER LOWER	81141-K60-B60	ZA			F-12-1	10
15	COVER, L. BODY SIDE	83620-K59-A70	ZB			F-15-1	7
16	COVER, L. UNDER SIDE	64360-K60-B60	ZB			F-15-1	2
17	COVER, R. BODY SIDE	83520-K59-A70	ZB			F-15-1	5
18	COVER, R. UNDER SIDE	64350-K60-B60	ZB			F-15-1	1
19	COVER, RACK	81131-K59-A70	YA			F-12-1	8
20	COVER, RR. CENTER	83750-K59-A70	ZD			F-15-1	8
21	COVER, RR. FENDER UPPER	80103-K59-A70	ZB			F-39-1	7
22	COVER, UNDER	64340-K59-A70	ZB			F-14-1	4
23	FENDER SET A, RR.	80100-K59-T10	ZA			F-39-1	4
24	FENDER SET, FR.	61110-K2V-N10	ZA			F-11	3
25	GARNISH, FR.	64303-K59-A70	ZD			F-12-1	3

ACB125CBF (ACB125CBFN)

No.	MODEL / COLOR / CODE / Name of colored parts	Basic part No.	ACB125CBFN Nitric orange YR-271	Applicable model		Applicable block No.	Ref. No.
			YR271	Initial applicable model	Final applicable model		
26	GARNISH, L. FR.	64420-K59-A70	ZD			F-14-1	5
27	GARNISH, L. INNER	64430-K59-A70	ZC			F-12-1	5
28	GARNISH, R. FR.	64320-K59-A70	ZD			F-14-1	3
29	GARNISH, R. INNER	64330-K59-A70	ZC			F-12-1	4
30	HOOK, LUGGAGE	81132-GAH-000	YV			F-12-1	9
31	LID, BATTERY	64460-K59-A70	ZB			F-14-1	6
32	MARK	86531-KYZ-710	ZA			F-48-1	4
33	MARK	86611-K59-A80	ZE			F-48-1	5
34	MARK, HONDA	86101-K93-N00	ZE			F-48-1	1
35	MARK, HONDA	86102-KZR-700	ZA			F-48-1	2
36	PLUG, HOLE	90656-GCC-000	ZE			F-24	14
37	RAIL, RR. GRAB	84100-K59-A70	ZH			F-24	10
38	STEP, FLOOR	64310-K59-A70	ZB			F-14-1	2
39	STRIPE A, L. FR. COVER	86642-K2V-H00	ZB			F-48-1	22
40	STRIPE A, R. FR. COVER	86641-K2V-H00	ZB			F-48-1	21
41	STRIPE B, L. FR. COVER	86644-K2V-H00	ZB			F-48-1	24
42	STRIPE B, R. FR. COVER	86643-K2V-H00	ZB			F-48-1	23
43	STRIPE, L. BODY COVER	86832-K2V-H00	ZB			F-48-1	26
44	STRIPE, R. BODY COVER	86831-K2V-H00	ZB			F-48-1	25
45	WHEEL SUB ASSY., FR.	44650-K59-A10	ZA			F-20-40	6
46	WHEEL SUB ASSY., RR.	42650-K59-A10	ZA			F-22-30	2

ACB125CBF (ACB125CBFP)

No.	MODEL		ACB125CBFP							
	COLOR		Pearl boracay white	Pearl pinatubo gray	Obsidian black metallic	Stellar blue metallic	Applicable model		Applicable block No.	Ref. No.
	CODE		NH-C86P	NH-C87P	NH-C88M	PB-441M				
	Name of colored parts	Basic part No.	NHC86	NHC87	NHC88	PB441	Initial applicable model	Final applicable model		
1	BRACKET, RR. FENDER	50186-K59-A70	ZA	ZA	ZA	ZA			F-39-1	3
2	CAP, TAIL	18306-K59-A70	ZA	ZA	ZA	ZA			F-30-1	4
3	COVER COMP., HANDLE RR.	53280-K2V-N30	ZA	ZA	ZA	ZA			F-9-1	4
4	COVER SET, FR.	64300-K2V-H20	ZF	ZH	ZK	ZG			F-12-2	2
5	COVER SET, FR. TOP	64200-K2V-H20	ZK	ZJ	ZH	ZG			F-12-2	1
6	COVER SET, HANDLE TOP	53290-K2V-H20	ZF	ZH	ZK	ZG			F-9-1	17
7	COVER SET, L. BODY	83550-K2V-H20	ZF	ZH	ZK	ZG			F-15-2	6
8	COVER SET, L. FR.	64600-K2V-H20	ZF	ZH	ZK	ZG			F-12-2	7
9	COVER SET, R. BODY	83450-K2V-H20	ZF	ZH	ZK	ZG			F-15-2	4
10	COVER SET, R. FR.	64500-K2V-H20	ZF	ZH	ZK	ZG			F-12-2	6
11	COVER, CENTER	80151-K2V-N30	ZA	ZA	ZA	ZA			F-15-2	3
12	COVER, FR. LOWER	64308-K2V-N30	ZA	ZA	ZA	ZA			F-14-2	1
13	COVER, HANDLE FR.	53205-K2V-N30	ZA	ZA	ZA	ZA			F-9-1	16
14	COVER, INNER	81141-K2V-N30	ZA	ZA	ZA	ZA			F-12-2	14
15	COVER, L. BODY SIDE	83620-K2V-N30	ZA	ZA	ZA	ZA			F-15-2	7
16	COVER, L. UNDER SIDE	64360-K60-B60	ZB	ZB	ZB	ZB			F-15-2	2
17	COVER, R. BODY SIDE	83520-K2V-N30	ZA	ZA	ZA	ZA			F-15-2	5
18	COVER, R. UNDER SIDE	64350-K60-B60	ZB	ZB	ZB	ZB			F-15-2	1
19	COVER, RACK	81131-K2V-N30	ZT	ZS	ZR	ZQ			F-12-2	9
20	COVER, RR. CENTER	83750-K59-A70	YC	YB	YA	ZY			F-15-2	8
21	COVER, RR. FENDER UPPER	80103-K59-A70	ZB	ZB	ZB	ZB			F-39-1	7
22	COVER, UNDER	64340-K59-A70	ZB	ZB	ZB	ZB			F-14-2	3
23	FENDER SET A, RR.	80100-K59-T10	ZA	ZA	ZA	ZA			F-39-1	4
24	FENDER SET, FR.	61110-K2V-H20	ZF	ZH	ZK	ZG			F-11	3
25	GARNISH, FR.	64303-K2V-N30	ZA	ZA	ZA	ZA			F-12-2	3

ACB125CBF (ACB125CBFP)

No.	MODEL		ACB125CBFP							
	COLOR		Pearl boracay white	Pearl pinatubo gray	Obsidian black metallic	Stellar blue metallic	Applicable model		Applicable block No.	Ref. No.
	CODE		NH-C86P	NH-C87P	NH-C88M	PB-441M				
	Name of colored parts	Basic part No.	NHC86	NHC87	NHC88	PB441	Initial applicable model	Final applicable model		
26	GARNISH, L. FR.	64420-K2V-N30	ZA	ZA	ZA	ZA			F-12-2	5
27	GARNISH, R. FR.	64320-K2V-N30	ZA	ZA	ZA	ZA			F-12-2	4
28	HOOK, LUGGAGE	81132-GAH-000	YV	YV	YV	YV			F-12-2	10
29	LID ASSY., INNER POCKET	81130-K2V-N30	ZA	ZA	ZA	ZA			F-12-2	8
30	LID, BATTERY	64460-K59-A70	ZB	ZB	ZB	ZB			F-14-2	4
31	MARK	86531-KYZ-710	ZA	ZA	ZA	ZA			F-48-2	4
32	MARK	86611-K2V-H20	ZA	ZC	ZE	ZB			F-48-2	5
33	MARK, HONDA	86101-K2V-H20	ZA	ZC	ZE	ZB			F-48-2	1
34	MARK, HONDA	86102-KZR-700	ZA	ZA	ZA	ZA			F-48-2	2
35	PLUG, HOLE	90656-GCC-000	ZE	ZE	ZE	ZE			F-24	14
36	RAIL, RR. GRAB	84100-K59-A70	ZH	ZH	ZH	ZH			F-24	10
37	STEP, FLOOR	64310-K2V-N30	ZA	ZA	ZA	ZA			F-14-2	2
38	STRIPE A, L. FR. COVER	86643-K2V-H20	ZA	ZC	ZE	ZB			F-48-2	7
39	STRIPE A, R. FR. COVER	86642-K2V-H20	ZA	ZC	ZE	ZB			F-48-2	6
40	STRIPE B, L. FR. COVER	86645-K2V-H20	ZA	ZC	ZE	ZB			F-48-2	9
41	STRIPE B, R. FR. COVER	86644-K2V-H20	ZA	ZC	ZE	ZB			F-48-2	8
42	STRIPE, L. BODY COVER	86833-K2V-H20	ZA	ZC	ZE	ZB			F-48-2	13
43	STRIPE, L. FR. COVER	86647-K2V-H20	ZA	ZC	ZE	ZB			F-48-2	11
44	STRIPE, R. BODY COVER	86832-K2V-H20	ZA	ZC	ZE	ZB			F-48-2	12
45	STRIPE, R. FR. COVER	86646-K2V-H20	ZA	ZC	ZE	ZB			F-48-2	10
46	WHEEL SUB ASSY., FR.	44650-K2V-N30	ZA	ZA	ZA	ZA			F-20-41	6
47	WHEEL SUB ASSY., RR.	42650-K2V-N30	ZA	ZA	ZA	ZA			F-22-30	12

ACB125CBF (ACB125CBFP)

No.	MODEL		ACB125CBFP				
	COLOR		Pearl crimson red	Applicable model		Applicable block No.	Ref. No.
	CODE		R-410P				
	Name of colored parts	Basic part No.	R410	Initial applicable model	Final applicable model		
1	BRACKET, RR. FENDER	50186-K59-A70	ZA			F-39-1	3
2	CAP, TAIL	18306-K59-A70	ZA			F-30-1	4
3	COVER COMP., HANDLE RR.	53280-K2V-N30	ZA			F-9-1	4
4	COVER SET, FR.	64300-K2V-H20	ZJ			F-12-2	2
5	COVER SET, FR. TOP	64200-K2V-H20	ZF			F-12-2	1
6	COVER SET, HANDLE TOP	53290-K2V-H20	ZJ			F-9-1	17
7	COVER SET, L. BODY	83550-K2V-H20	ZJ			F-15-2	6
8	COVER SET, L. FR.	64600-K2V-H20	ZJ			F-12-2	7
9	COVER SET, R. BODY	83450-K2V-H20	ZJ			F-15-2	4
10	COVER SET, R. FR.	64500-K2V-H20	ZJ			F-12-2	6
11	COVER, CENTER	80151-K2V-N30	ZA			F-15-2	3
12	COVER, FR. LOWER	64308-K2V-N30	ZA			F-14-2	1
13	COVER, HANDLE FR.	53205-K2V-N30	ZA			F-9-1	16
14	COVER, INNER	81141-K2V-N30	ZA			F-12-2	14
15	COVER, L. BODY SIDE	83620-K2V-N30	ZA			F-15-2	7
16	COVER, L. UNDER SIDE	64360-K60-B60	ZB			F-15-2	2
17	COVER, R. BODY SIDE	83520-K2V-N30	ZA			F-15-2	5
18	COVER, R. UNDER SIDE	64350-K60-B60	ZB			F-15-2	1
19	COVER, RACK	81131-K2V-N30	ZP			F-12-2	9
20	COVER, RR. CENTER	83750-K59-A70	ZX			F-15-2	8
21	COVER, RR. FENDER UPPER	80103-K59-A70	ZB			F-39-1	7
22	COVER, UNDER	64340-K59-A70	ZB			F-14-2	3
23	FENDER SET A, RR.	80100-K59-T10	ZA			F-39-1	4
24	FENDER SET, FR.	61110-K2V-H20	ZJ			F-11	3
25	GARNISH, FR.	64303-K2V-N30	ZA			F-12-2	3

ACB125CBF (ACB125CBFP)

No.	MODEL		ACB125CBFP				
	COLOR		Pearl crimson red	Applicable model		Applicable block No.	Ref. No.
	CODE		R-410P				
	Name of colored parts	Basic part No.	R410	Initial applicable model	Final applicable model		
26	GARNISH, L. FR.	64420-K2V-N30	ZA			F-12-2	5
27	GARNISH, R. FR.	64320-K2V-N30	ZA			F-12-2	4
28	HOOK, LUGGAGE	81132-GAH-000	YV			F-12-2	10
29	LID ASSY., INNER POCKET	81130-K2V-N30	ZA			F-12-2	8
30	LID, BATTERY	64460-K59-A70	ZB			F-14-2	4
31	MARK	86531-KYZ-710	ZA			F-48-2	4
32	MARK	86611-K2V-H20	ZD			F-48-2	5
33	MARK, HONDA	86101-K2V-H20	ZD			F-48-2	1
34	MARK, HONDA	86102-KZR-700	ZA			F-48-2	2
35	PLUG, HOLE	90656-GCC-000	ZE			F-24	14
36	RAIL, RR. GRAB	84100-K59-A70	ZH			F-24	10
37	STEP, FLOOR	64310-K2V-N30	ZA			F-14-2	2
38	STRIPE A, L. FR. COVER	86643-K2V-H20	ZD			F-48-2	7
39	STRIPE A, R. FR. COVER	86642-K2V-H20	ZD			F-48-2	6
40	STRIPE B, L. FR. COVER	86645-K2V-H20	ZD			F-48-2	9
41	STRIPE B, R. FR. COVER	86644-K2V-H20	ZD			F-48-2	8
42	STRIPE, L. BODY COVER	86833-K2V-H20	ZD			F-48-2	13
43	STRIPE, L. FR. COVER	86647-K2V-H20	ZD			F-48-2	11
44	STRIPE, R. BODY COVER	86832-K2V-H20	ZD			F-48-2	12
45	STRIPE, R. FR. COVER	86646-K2V-H20	ZD			F-48-2	10
46	WHEEL SUB ASSY., FR.	44650-K2V-N30	ZA			F-20-41	6
47	WHEEL SUB ASSY., RR.	42650-K2V-N30	ZA			F-22-30	12

Fuel hose, general purpose hoses and vinyl hose

- The standard part fuel hose, general purpose hose and vinyl hose may be substituted by the coiled bulk part.
- When ordering the standard part fuel hose, general purpose hose and vinyl hose use the bulk part number written in the parts catalogue in brackets ( ) underneath the part name, or use the catalogue below.
  (The bulk part standard length is 1 m, however, those displayed in the catalogue < > are available in 3 m and 8 m lengths.)
- When exchanging the hose, cut and use at the specified length as mentioned in the part name.
  (For the method of cutting the bulk part, and method of filling out orders etc., please refer to the service manual and the instructions issued with the bulk part.)

- The list below is a catalogue of the standard part numbers and bulk part numbers. Note that those numbers are applicable to the listed replacement parts only.

Fuel hoses/Tubes

Standard part No.	Bulk part No.	Bulk part	
		Inner diameter (mm)	Length (m)
95001-30xxx-2x	95001-30001-20M	3.0	1
95001-30xxx-3x	95001-30001-30M	3.0	1
95001-30xxx-4x	95001-30001-40M	3.0	1
95001-35xxx-2x	95001-35001-50M <95001-35003-50M>	3.5	1 3
95001-35xxx-3x	95001-35001-60M <95001-35003-60M>	3.5	1 3
95001-35xxx-4x	95001-35001-60M <95001-35003-60M>	3.5	1 3
95001-35xxx-5x	95001-35001-50M <95001-35003-50M>	3.5	1 3
95001-35xxx-6x	95001-35001-60M <95001-35003-60M>	3.5	1 3
95001-45xxx-2x	95001-45001-50M <95001-45003-50M>	4.5	1 3
95001-45xxx-3x	95001-45001-60M <95001-45003-60M> <95001-45008-60M>	4.5	1 3 8
95001-45xxx-4x	95001-45001-60M <95001-45003-60M> <95001-45008-60M>	4.5	1 3 8
95001-45xxx-5x	95001-45001-50M <95001-45003-50M>	4.5	1 3
95001-45xxx-6x	95001-45001-60M <95001-45003-60M> <95001-45008-60M>	4.5	1 3 8
95001-55xxx-2x	95001-55001-50M <95001-55003-50M> <95001-55008-50M>	5.5	1 3 8

Fuel hoses/Tubes

Standard part No.	Bulk part No.	Bulk part	
		Inner diameter (mm)	Length (m)
95001-55xxx-3x	95001-55001-60M <95001-55003-60M> <95001-55008-60M>	5.5	1 3 8
95001-55xxx-4x	95001-55001-60M <95001-55003-60M> <95001-55008-60M>	5.5	1 3 8
95001-55xxx-5x	95001-55001-50M <95001-55003-50M> <95001-55008-50M>	5.5	1 3 8
95001-55xxx-6x	95001-55001-60M <95001-55003-60M> <95001-55008-60M>	5.5	1 3 8
95001-75xxx-2x	95001-75001-50M <95001-75003-50M>	7.5	1 3
95001-75xxx-3x	95001-75001-60M <95001-75003-60M> <95001-75008-60M>	7.5	1 3 8
95001-75xxx-4x	95001-75001-60M <95001-75003-60M> <95001-75008-60M>	7.5	1 3 8
95001-75xxx-5x	95001-75001-50M <95001-75003-50M>	7.5	1 3
95001-75xxx-6x	95001-75001-60M <95001-75003-60M> <95001-75008-60M>	7.5	1 3 8
95001-80xxx-2x	95001-80001-50M	8.0	1
95001-80xxx-3x	95001-80001-60M	8.0	1
95001-80xxx-4x	95001-80001-60M	8.0	1
95001-80xxx-5x	95001-80001-50M	8.0	1
95001-80xxx-6x	95001-80001-60M	8.0	1

Vinyl tube				
Standard part No.	Bulk part No.	Bulk part		
		Inner dia- meter (mm)	Outer dia-meter (mm)	Length (m)
95003-01xxx-3x	95003-01001-60M <95003-01003-60M>	2.9	6.8	1 3
95003-01xxx-60	95003-01001-60M <95003-01003-60M>	2.9	6.8	1 3
95003-03xxx-3x	95003-03001-60M <95003-03003-60M>	3.0	6.0	1 3
95003-03xxx-60	95003-03001-60M <95003-03003-60M>	3.0	6.0	1 3
95003-05xxx-3x	95003-05001-60M <95003-05003-60M> <95003-05008-60M>	3.5	6.5	1 3 8
95003-05xxx-60	95003-05001-60M <95003-05003-60M> <95003-05008-60M>	3.5	6.5	1 3 8
95003-07xxx-1x	95003-07001-10M <95003-07003-10M> <95003-07008-10M>	4.0	7.0	1 3 8
95003-07xxx-20	95003-07001-10M <95003-07003-10M> <95003-07008-10M>	4.0	7.0	1 3 8
95003-07xxx-3x	95003-07001-60M <95003-07003-60M> <95003-07008-60M>	4.0	7.0	1 3 8
95003-07xxx-60	95003-07001-60M <95003-07003-60M> <95003-07008-60M>	4.0	7.0	1 3 8
95003-07xxx-7x	95003-07001-70M <95003-07003-70M> <95003-07008-70M>	4.0	7.0	1 3 8
95003-08xxx-1x	95003-08001-10M <95003-08003-10M> <95003-08008-10M>	4.5	6.5	1 3 8
95003-09xxx-3x	95003-09001-60M <95003-09003-60M>	4.5	8.0	1 3
95003-09xxx-60	95003-09001-60M <95003-09003-60M>	4.5	8.0	1 3
95003-10xxx-1x	95003-10001-10M <95003-10003-10M>	5.0	8.0	1 3
95003-10xxx-20	95003-10001-10M <95003-10003-10M>	5.0	8.0	1 3
95003-10xxx-3x	95003-10001-60M <95003-10003-60M>	5.0	8.0	1 3
95003-10xxx-60	95003-10001-60M <95003-10003-60M>	5.0	8.0	1 3
95003-11xxx-3x	95003-11001-60M <95003-11003-60M> <95003-11008-60M>	5.0	9.0	1 3 8
95003-11xxx-60	95003-11001-60M <95003-11003-60M> <95003-11008-60M>	5.0	9.0	1 3 8
95003-12xxx-1x	95003-12001-10M <95003-12003-10M> <95003-12008-10M>	5.0	7.0	1 3 8
95003-12xxx-20	95003-12001-10M <95003-12003-10M> <95003-12008-10M>	5.0	7.0	1 3 8

Vinyl tube				
Standard part No.	Bulk part No.	Bulk part		
		Inner dia- meter (mm)	Outer dia-meter (mm)	Length (m)
95003-14xxx-1x	95003-14001-10M <95003-14003-10M>	6.0	9.0	1 3
95003-14xxx-20	95003-14001-10M <95003-14003-10M>	6.0	9.0	1 3
95003-14xxx-3x	95003-14001-60M <95003-14003-60M>	6.0	9.0	1 3
95003-17xxx-1x	95003-17001-10M <95003-17003-10M>	7.0	9.0	1 3
95003-19xxx-1x	95003-19001-10M <95003-19003-10M> <95003-19008-10M>	7.0	11.0	1 3 8
95003-19xxx-20	95003-19001-10M <95003-19003-10M> <95003-19008-10M>	7.0	11.0	1 3 8
95003-19xxx-3x	95003-19001-60M <95003-19003-60M> <95003-19008-60M>	7.0	11.0	1 3 8
95003-19xxx-60	95003-19001-60M <95003-19003-60M> <95003-19008-60M>	7.0	11.0	1 3 8
95003-21xxx-1x	95003-21001-10M <95003-21003-10M>	8.0	9.0	1 3
95003-21xxx-20	95003-21001-10M <95003-21003-10M>	8.0	9.0	1 3
95003-23xxx-1x	95003-23001-10M <95003-23003-10M>	8.0	12.0	1 3
95003-23xxx-20	95003-23001-10M <95003-23003-10M>	8.0	12.0	1 3
95003-23xxx-3x	95003-23001-60M <95003-23003-60M> <95003-23008-60M>	8.0	12.0	1 3 8
95003-23xxx-60	95003-23001-60M <95003-23003-60M> <95003-23008-60M>	8.0	12.0	1 3 8
95003-25xxx-1x	95003-25001-10M <95003-25003-10M>	9.0	11.0	1 3
95003-25xxx-20	95003-25001-10M <95003-25003-10M>	9.0	11.0	1 3
95003-25xxx-3x	95003-25001-60M <95003-25003-60M>	9.0	11.0	1 3
95003-25xxx-7x	95003-25001-70M <95003-25003-70M>	9.0	11.0	1 3
95003-27xxx-1x	95003-27001-10M <95003-27003-10M>	9.0	13.0	1 3
95003-27xxx-20	95003-27001-10M <95003-27003-10M>	9.0	13.0	1 3
95003-27xxx-3x	95003-27001-60M <95003-27003-60M>	9.0	13.0	1 3
95003-27xxx-60	95003-27001-60M <95003-27003-60M>	9.0	13.0	1 3
95003-33xxx-1x	95003-33001-10M <95003-33003-10M>	10.0	14.0	1 3
95003-33xxx-20	95003-33001-10M <95003-33003-10M>	10.0	14.0	1 3

Vinyl tube				
Standard part No.	Bulk part No.	Bulk part		
		Inner dia- meter (mm)	Outer dia-meter (mm)	Length (m)
95003-36xxx-1x	95003-36001-10M <95003-36003-10M> <95003-36008-10M>	11.0	13.0	1 3 8
95003-36xxx-20	95003-36001-10M <95003-36003-10M> <95003-36008-10M>	11.0	13.0	1 3 8
95003-37xxx-3x	95003-37001-60M 95003-37003-60M>	11.0	15.0	1 3
95003-37xxx-60	95003-37001-60M <95003-37003-60M>	11.0	15.0	1 3
95003-38xxx-1x	95003-38001-10M <95003-38003-10M>	12.0	13.0	1 3
95003-38xxx-20	95003-38001-10M <95003-38003-10M>	12.0	13.0	1 3
95003-39xxx-1x	95003-39001-10M <95003-39003-10M>	12.0	14.0	1 3
95003-39xxx-20	95003-39001-10M <95003-39003-10M>	12.0	14.0	1 3
95003-40xxx-20	95003-40001-10M <95003-40003-10M>	12.0	16.0	1 3
95003-40xxx-3x	95003-40001-60M <95003-40003-60M>	12.0	16.0	1 3
95003-40xxx-60	95003-40001-60M <95003-40003-60M>	12.0	16.0	1 3
95003-43xxx-1x	95003-43001-10M <95003-43003-10M> <95003-43008-10M>	13.0	15.0	1 3 8
95003-43xxx-20	95003-43001-10M <95003-43003-10M> <95003-43008-10M>	13.0	15.0	1 3 8
95003-45xxx-1x	95003-45001-10M <95003-45003-10M> <95003-45008-10M>	14.0	18.0	1 3 8
95003-45xxx-20	95003-45001-10M <95003-45003-10M> <95003-45008-10M>	14.0	18.0	1 3 8
95003-50xxx-1x	95003-50001-10M <95003-50003-10M>	16.0	19.0	1 3
95003-50xxx-20	95003-50001-10M <95003-50003-10M>	16.0	19.0	1 3
95003-50xxx-3x	95003-50001-60M <95003-50003-60M>	16.0	19.0	1 3
95003-55xxx-1x	95003-55001-10M <95003-55003-10M>	17.5	20.5	1 3
95003-55xxx-20	95003-55001-10M <95003-55003-10M>	17.5	20.5	1 3
95003-60xxx-1x	95003-60001-10M <95003-60003-10M>	22.0	27.0	1 3
95003-60xxx-20	95003-60001-10M <95003-60003-10M>	22.0	27.0	1 3
95003-60xxx-3x	95003-60001-60M <95003-60003-60M>	22.0	27.0	1 3
95003-60xxx-60	95003-60001-60M <95003-60003-60M>	22.0	27.0	1 3

General purpose hoses			
Standard part No.	Bulk part No.	Bulk part	
		Inner diameter (mm)	Length (m)
95005-11xxx-3x	95005-11001-30M	11.0	1
95005-11xxx-5x	95005-11001-50M	11.0	1
95005-12xxx-1x	95005-12001-10M <95005-12003-10M>	12.0	1 3
95005-12xxx-2x	95005-12001-20M	12.0	1
95005-12xxx-3x	95005-12001-30M	12.0	1
95005-12xxx-5x	95005-12001-50M	12.0	1
95005-14xxx-1x	95005-14001-10M	14.0	1
95005-14xxx-2x	95005-14001-20M <95005-14003-20M>	14.0	1 3
95005-14xxx-3x	95005-14001-30M	14.0	1
95005-14xxx-5x	95005-14001-50M	14.0	1
95005-17xxx-1x	95005-17001-10M	17.0	1
95005-17xxx-2x	95005-17001-20M	17.0	1
95005-17xxx-3x	95005-17001-30M	17.0	1
95005-17xxx-5x	95005-17001-50M	17.0	1
95005-30xxx-3x	95005-30001-30M	3.0	1
95005-30xxx-5x	95005-30001-50M	3.0	1
95005-35xxx-1x	95005-35001-10M <95005-35003-10M> <95005-35008-10M>	3.5	1 3 8
95005-35xxx-2x	95005-35001-20M	3.5	1
95005-35xxx-3x	95005-35001-30M	3.5	1
95005-35xxx-4x	95005-35001-10M <95005-35003-10M> <95005-35008-10M>	3.5	1 3 8
95005-35xxx-5x	95005-35001-50M	3.5	1
95005-45xxx-1x	95005-45001-10M <95005-45003-10M> <95005-45008-10M>	4.5	1 3 8
95005-45xxx-2x	95005-45001-20M	4.5	1
95005-45xxx-3x	95005-45001-30M	4.5	1

General purpose hoses			
Standard part No.	Bulk part No.	Bulk part	
		Inner diameter (mm)	Length (m)
95005-45xxx-4x	95005-45001-10M <95005-45003-10M> <95005-45008-10M>	4.5	1 3 8
95005-45xxx-5x	95005-45001-50M	4.5	1
95005-50xxx-3x	95005-50001-30M <95005-50003-30M>	5.0	1 3
95005-50xxx-5x	95005-50001-50M	5.0	1
95005-55xxx-1x	95005-55001-10M <95005-55003-10M> <95005-55008-10M>	5.3	1 3 8
95005-55xxx-2x	95005-55001-20M <95005-55003-20M>	5.3	1 3
95005-55xxx-4x	95005-55001-10M <95005-55003-10M> <95005-55008-10M>	5.3	1 3 8
95005-65xxx-1x	95005-65001-10M <95005-65003-10M>	6.5	1 3
95005-65xxx-2x	95005-65001-20M	6.5	1
95005-70xxx-3x	95005-70001-30M <95005-70003-30M>	7.0	1 3
95005-70xxx-5x	95005-70001-50M	7.0	1
95005-75xxx-1x	95005-75001-10M <95005-75003-10M>	7.3	1 3
95005-75xxx-2x	95005-75001-20M	7.3	1
95005-80xxx-1x	95005-80001-10M <95005-80003-10M>	8.0	1 3
95005-80xxx-2x	95005-80001-20M	8.0	1
95005-80xxx-3x	95005-80001-30M	8.0	1
95005-80xxx-5x	95005-80001-50M	8.0	1
95005-91xxx-3x	95005-91001-30M	12.0	1
95005-91xxx-5x	95005-91001-50M	12.0	1
95005-92xxx-3x	95005-92001-30M	12.0	1
95005-92xxx-5x	95005-92001-50M	12.0	1

NOTE: X is displayed to represent the omitted numerals and letters of the roman alphabet.

◎ **CAUTION: It is DANGEROUS to confuse the fuel hose with the general purpose hose or vinyl hose.**
Never use a general purpose hose or vinyl hose in place of a fuel hose or vice versa. Always use the correct bulk part in the parts catalogue, according to the service manual or the instructions issued with the bulk part.

- **Bulk part number of fuel hose, general purpose hose and vinyl hose.**

(Example)

95001-75001-50M

Bulk part number: Refers to the bulk part.

Marking code (hose type): (fuel hose and general purpose hose)
Change code (for added hose): (Vinyl hose)
- Indicates number mark or change sequence, however, the code for the bulk part must be strictly 0 (zero).

Types of code:

• Fuel hose	2: Red outside braid (3 mm inside dia. only)	• Vinyl hose	1: Clear	• General hose	1: Ash gray
	5: Black inside braid		2: Black		2: Ash gray
	3: Red (3 mm inside dia. only)		3: Light red		3: Black
	4: Ash gray with red stripe (3 mm inside dia. only)		6: Light red		5: Black
	6: Black		7: Pale black		

Lengths: 001: 1 m (standard)
003: 3 m
008: 8 m

I.D code: (fuel hose and general purpose hose)

30: 3.0 mm	11: 11 mm
35: 3.5 mm	91: 12 mm (outside dia. 15) mm
45: 4.5 mm	92: 12 mm (outside dia. 16) mm
50: 5.0 mm	12: 12 mm (outside dia. 17) mm
55: 5.3 mm, 5.5 mm	14: 14 mm
65: 6.5 mm	17: 17 mm
70: 7.0 mm	
75: 7.3 mm, 7.5 mm	
80: 8.0 mm	

ID./OD. code: (vinyl hose)

01: ID. 2.9, OD. 6.8 mm	14: ID. 6.0, OD. 9.0 mm	37: ID. 11.0, OD. 15.0 mm
03: ID. 3.0, OD. 6.0 mm	17: ID. 7.0, OD. 9.0 mm	38: ID. 12.0, OD. 13.0 mm
05: ID. 3.5, OD. 6.5 mm	19: ID. 7.0, OD. 11.0 mm	39: ID. 12.0, OD. 14.0 mm
07: ID. 4.0, OD. 7.0 mm	21: ID. 8.0, OD. 9.0 mm	40: ID. 12.0, OD. 16.0 mm
08: ID. 4.5, OD. 6.5 mm	23: ID. 8.0, OD. 12.0 mm	43: ID. 13.0, OD. 15.0 mm
09: ID. 4.5, OD. 8.0 mm	25: ID. 9.0, OD. 11.0 mm	45: ID. 14.0, OD. 18.0 mm
12: ID. 5.0, OD. 7.0 mm	27: ID. 9.0, OD. 13.0 mm	50: ID. 16.0, OD. 19.0 mm
10: ID. 5.0, OD. 8.0 mm	33: ID. 10.0, OD. 14.0 mm	55: ID. 17.5, OD. 20.5 mm
11: ID. 5.0, OD. 9.0 mm	36: ID. 11.0, OD. 13.0 mm	60: ID. 22.0, OD. 27.0 mm

Hose type: 1: Fuel hose
3: Vinyl hose
5: General hose

FLAT RATE SERVICE TIME

Flat rate service time (FRT) means the standard time required to service a MC, which is listed in this manual to help the dealers control the actual working process and calculate the service charge by using it as a guide.

FRT setting system

- Net service time
  - Removal, Disassembly/reassembly, Installation
  - Inspection, Measurement, Adjustment, Confirmation
  - Diagnosis/troubleshooting (Electric system)
  - Completion inspection
- Float time
  - Preparation (Process check, Confirmation arrangement for necessary tools)
  - Related work (Transfer of vehicles)

* Float time is set by multiplying the net service time by a given coefficient.

Editorial style

The service items shown in the text are listed with the exchange work time for the repair sales parts as the subject. Other representative service items not using repair parts (removal/installation, adjustment, inspection/measuring, and other work) are listed collectively in the list in the preface, classified according to the work.

FRT setting standard

- Decimal system (in unit of 0.1) is adopted to set FRT as it is convenient to calculate the wage.
  Example: (0.1)→6 minutes, (0.2)→12 minutes
  [Labor cost per hour] x [FRT] = [Wage]
- FRT is set with a hand tool.
- Service items and FRT can be subject to change depending on development of tools and service equipment and improvement in service procedure.

Work procedure

- As the work procedure is set with the work time according to the method in the separate Service Manual, refer to this Manual as required.
- Work methods permitting servicing in the shortest time still permitting assurance of safe work and product warranty are used for the setting of service items not listed in the Service Manual.
- Work basically is to be performed by one person, and when two or more people are required, setting is done as the total time for the number of people.
- The set value for the technological level of the workers uses a person with three years of experience in the repair of Honda vehicles as the standard.
- Special tools and service equipment used to set FRT are those specified or recommended in Service Manual.

Service item whose FRT is not presented

- Accessories and service parts that are not listed to use in this manual.
- Locations with little aging deterioration or breakage during normal use.
- Service work that can be finished by one touch.
- Service work that is seldom done (i.e. extremely small causes of trouble and service frequency).

* When FRT is not presented, please calculate wages based on appropriate actual work time

Operation not included of FRT

- Oil and coolant water draining, Waiting time for warming up operation and etc..
- Additional operation that involves removal/installation of standard exterior equipment.
- Indirect time spent for service by visiting the customer, trade-in, and delivery of a MC.
- Indirect time required for ordering and delivery of parts.
- Cost for grease, adhesive agent, etc. used for service work.

Explanation of FRT by using an example
(The example may differ from the actual presented items)

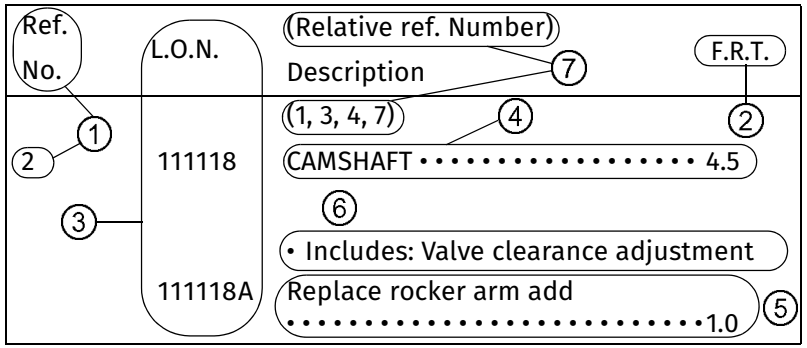

①Reference No. of the illustration of part that shows location of the replacement work.

②FRT is an abbreviation of Flat Rate Time indicating the standard service time required for the replacement.

③LON is an abbreviation of Labor Operation Number, and it is a classification of the service items by the work unit code.

The same operation code is used regardless of the models.

Standard operation is indicated with 6 digits code, and additional operation is indicated with 7 digits code.

④Indicating the camshaft replacement and FRT4.5.

⑤Indicating FRT1.0 that will be added when additional operation (replace rocker arm) is done in association with camshaft replacement.

⑥Indicating work contents that are included in the service item.

⑦Indicating a reference No. whose operation and time are the same as FRT4.5 for the camshaft.

(The application range is limited to the service items without an LON setting within a same block.)

How to refer to the service item by using the sample
(camshaft replacement)

Open to the page of the block where the camshaft's spare part illustration is shown.

⇩

Look for the camshaft illustration, and refer to the service item and FRT that agree with the reference No.

Indication mark for the listing of service items that continues to the following page

Ref. No.	L.O.N.	(Relative ref. Number) Description	F.R.T.
2	**111118**	**CAMSHAFT** • • • • • • • • • • • • • • • • • • •	**4.5**
	•	•	•
	•	•	•
+			

Mark indicated at the last line.

Indication of the block with no setting of FRT

Ref. No.	L.O.N.	(Relative ref. Number) Description	F.R.T.
NO INFORMATION •			

- **LON code system**

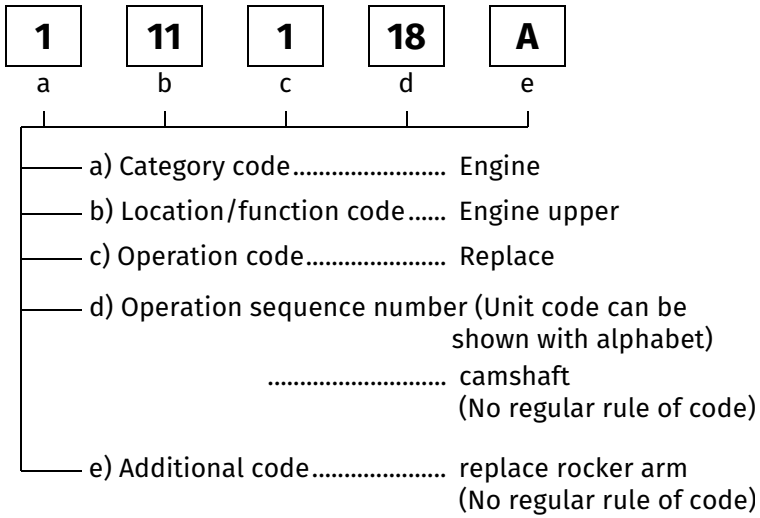

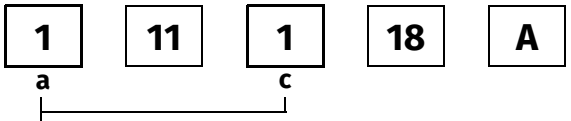

a) Category codes and classification

Code	Category
1	Engine
2	Transmission
3	Fuel & Exhaust
4	Frame & Body
5	Steering/Suspension
6	Electrical
7	Wheels/Brakes
8	Controls/instrument
9	-
0	-

c) Operation codes and classification

Code	Operation category
1	Replace, Removal/Installation, Change
2	Overhaul
3	Adjust, Balance
4	(Paint-related work: Top-coat)
5	Test, Inspect/diagnose, Measurement, Check
6	(Overhaul-related work: Rebore)
7	(Overhaul-related work: Reseal)
8	(Resurface)
9	(Paint-related work: Refinish)
0	Repair, Cleaning, Air bleeding

Major service items without using spare parts
Removal/Installation, Adjustment, Inspection/Measurement, Other work
E: Engine, F: Frame

*** OPERATIONS OTHER THAN REPLACING PARTS**

• Removal/installation

Set for the configuration with the parts removed from the vehicle.

	LON	DESCRIPTION	FRT
E	1101E5	**TILTING ENGINE ASSEMBLY-REMOVAL/INSTALLATION** INCLUDES: All necessary adjustment	1.9
	3111D5	**THROTTLE BODY ASSEMBLY-REMOVAL/INSTALLATION**	0.7
	1101E6	**CRANKCASE SEPARATION** INCLUDES: Engine removal and installation	4.3
F	1151E6	**RADIATOR ASSEMBLY-REMOVAL/INSTALLATION**	0.4

• Adjustment

	LON	DESCRIPTION	FRT
E	3143A0	**ENGINE IDLE-ADJUSTMENT**	0.1
	6143A1	**SPARK PLUG-ADJUSTMENT/CLEANING**	0.2
	1113A0	**VALVE CLEARANCE-ADJUSTMENT** NOTE: For 1 vehicle	0.8
F	6163A0	**HEADLIGHT-AIMING**	0.1
	7113A1	**REAR BRAKE-ADJUSTMENT** EXCLUDES: Rear brake shoe adjustment	0.1
	7113A1A	Adjust the equalizer add	0.3
	3113A3	**THROTTLE OPERATION-ADJUSTMENT**	0.1

• Inspection/Measurement

	LON	DESCRIPTION	FRT
E	1115A0	**COMPRESSION PRESSURE-MEASUREMENT**	0.3
	6145A0	**IGNITION TIMING-INSPECTION**	0.4
F	6105A0	**BATTERY-CHARGE** INCLUDES: In case of open type battery, checking electrolyte level and charge.	0.2

• Other work

	LON	DESCRIPTION	FRT
E	1130A1	**OIL FILTER SCREEN-CLEANING**	0.2
F	7110A0	**FRONT BRAKE-AIR BLEEDING**	0.2
	1151E7	**RADIATOR COOLANT-CHANGE**	0.3
	3115A3	**ECM INITIALIZE LEARNING**	0.2
	6185A0	**ECM/PCM UPDATE**	0.3

ENGINE GROUP

E-2

CYLINDER HEAD COVER(ACB125CBFH)

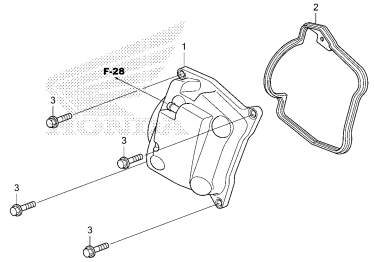

E-2-1

CYLINDER HEAD COVER(ACB125CBFK/L/M/N/P)

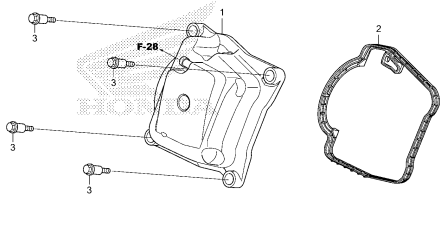

E-3

CYLINDER HEAD

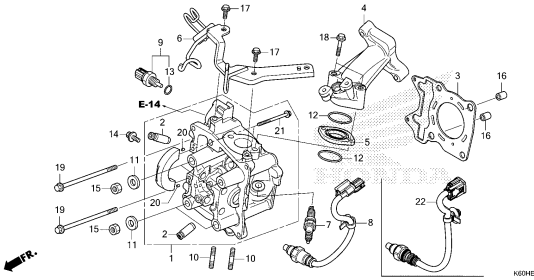

E-4

CAMSHAFT/VALVE

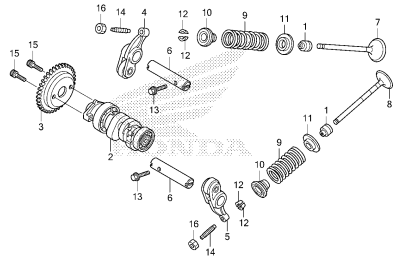

E-5

CAM CHAIN/TENSIONER

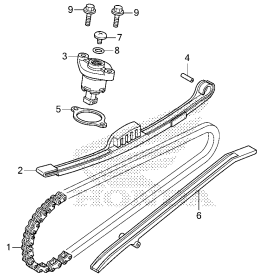

E-6

CYLINDER

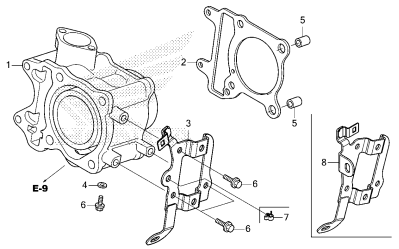

E-9

WATER PUMP

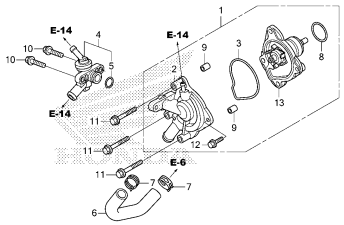

E-10

A.C.G. STARTER

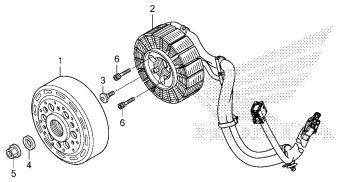

E-11

OIL PUMP

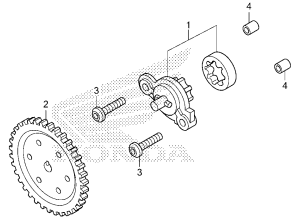

2

ENGINE GROUP

E-13

LEFT SIDE COVER(ACB125CBFH)

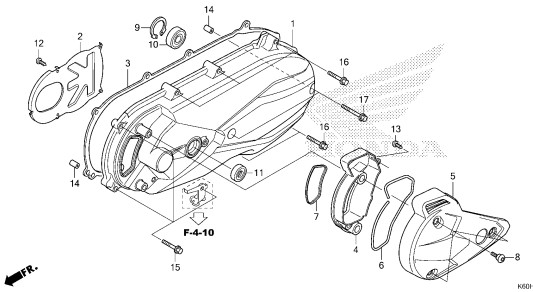

E-13-1

LEFT SIDE COVER(ACB125CBFK/L/M/N/P)

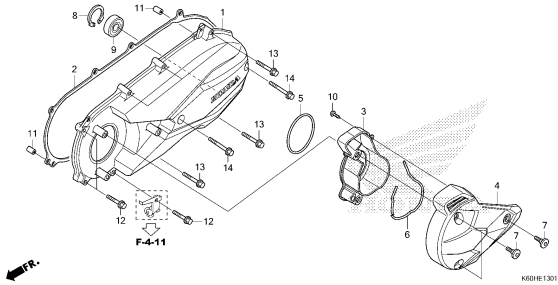

E-14

RADIATOR

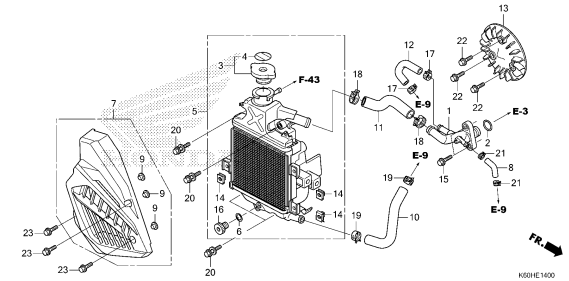

E-16

DRIVE FACE

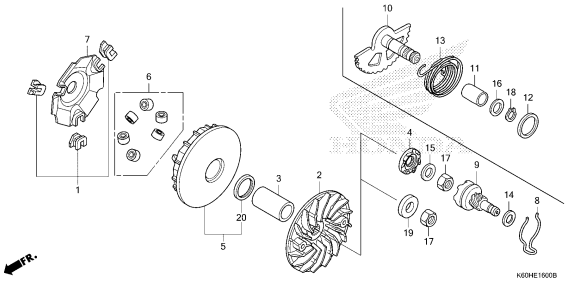

E-17

DRIVEN FACE

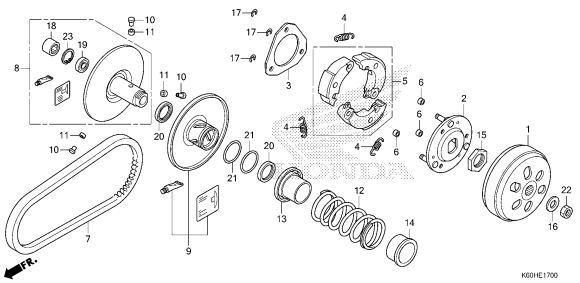

E-17-10

TRANSMISSION

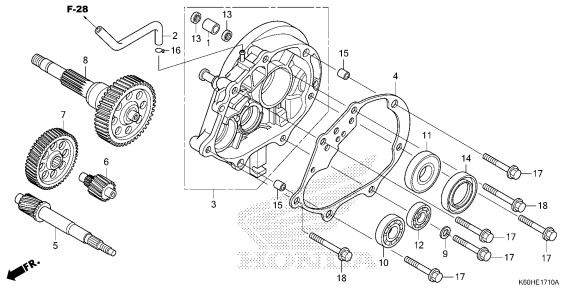

E-19-10

RIGHT CRANKCASE

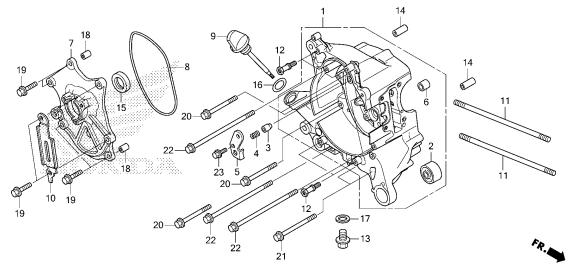

E-19-20

LEFT CRANKCASE

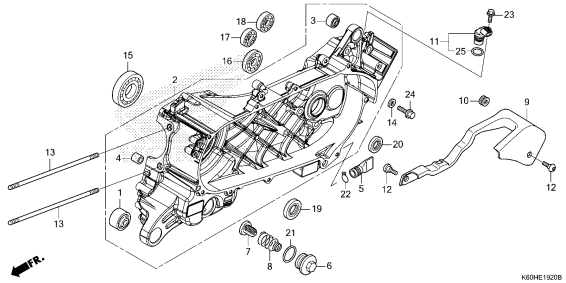

E-20

CRANKSHAFT/PISTON

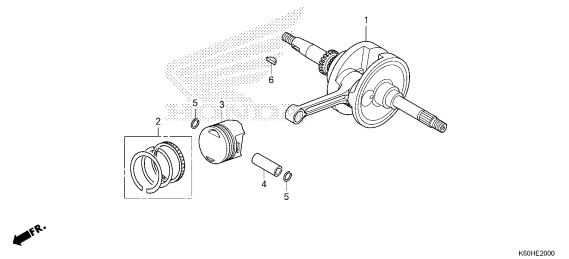

E-22

THROTTLE BODY/FUEL INJECTOR

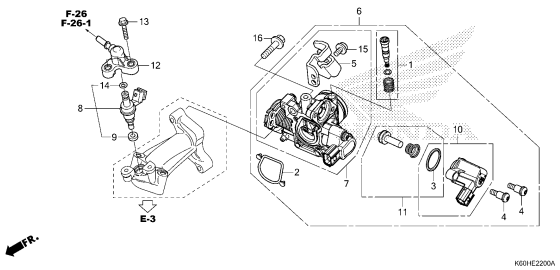

FRAME GROUP

F-1

HEADLIGHT(ACB125CBFH)

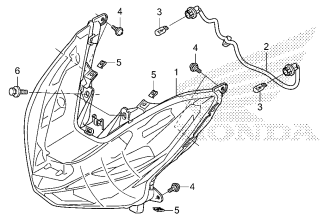

F-1-1

HEADLIGHT(ACB125CBFK/L/M/N/P)

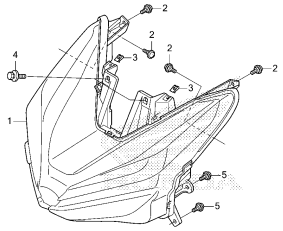

F-2

METER(ACB125CBFH)

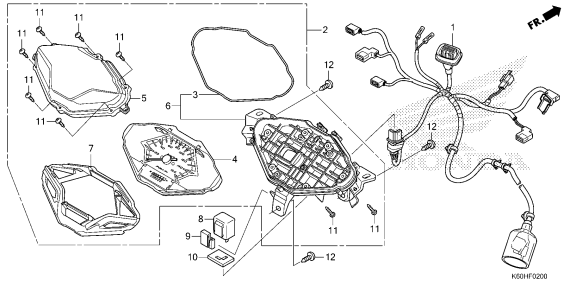

F-2-1

METER(ACB125CBFK/L/M/N/P)

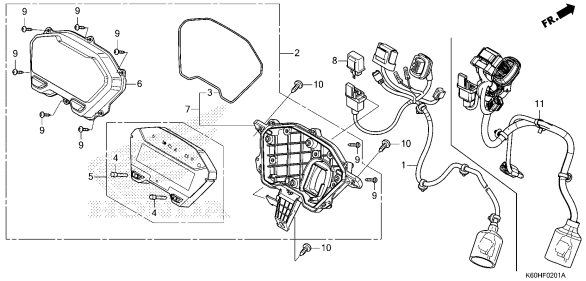

F-3

MIRROR

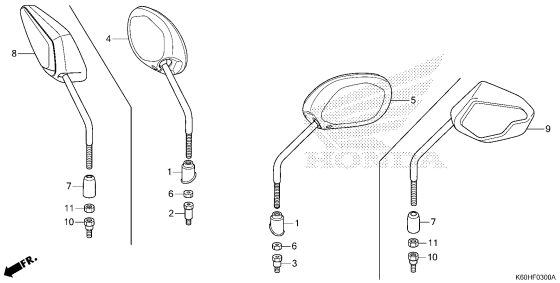

F-4-10

HANDLE LEVER/SWITCH/CABLE(ACB125CBFH)

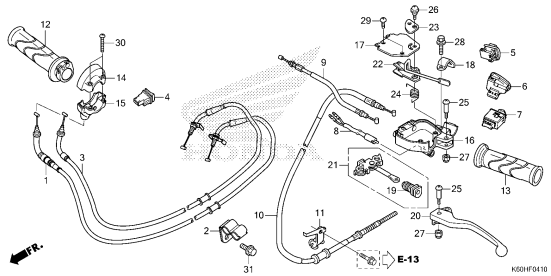

F-4-11

HANDLE LEVER/SWITCH/CABLE
(ACB125CBFK/L/M/N/P)

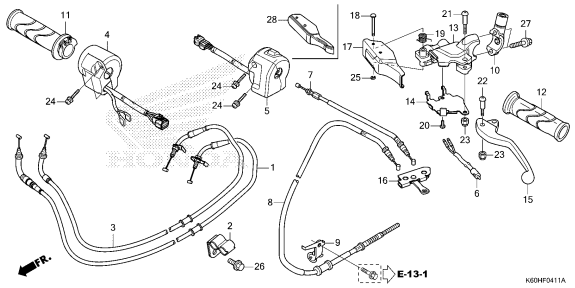

F-5-10

FRONT BRAKE MASTER CYLINDER(ACB125CBFH)

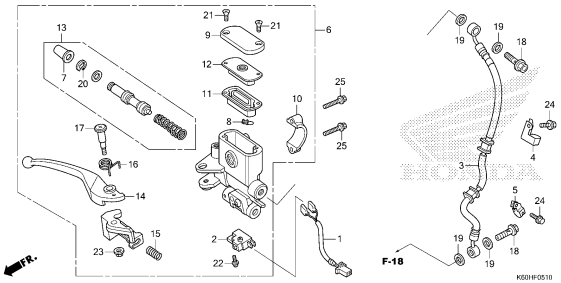

F-5-11

FRONT BRAKE MASTER CYLINDER
(ACB125CBFK/L/M/N/P)

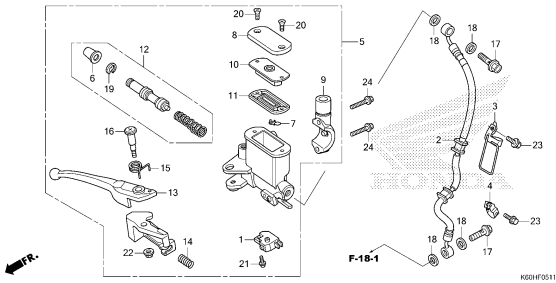

FRAME GROUP

F-9

HANDLE PIPE/HANDLE COVER(ACB125CBFH)

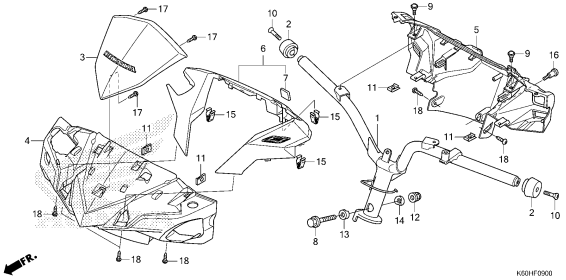

F-9-1

HANDLE PIPE/HANDLE COVER
(ACB125CBFK/L/M/N/P)

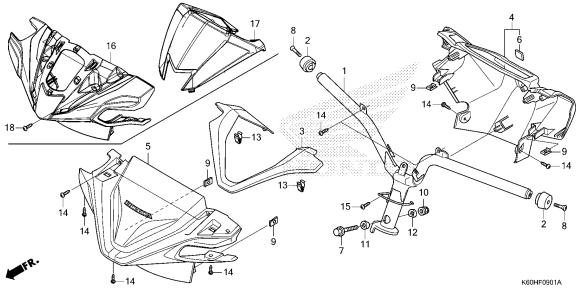

F-10

STEERING STEM

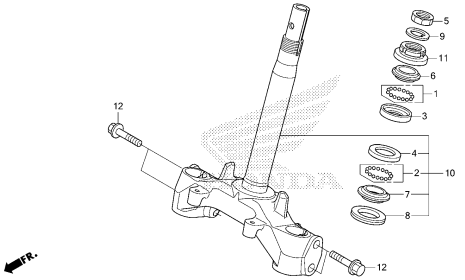

F-11

FRONT FENDER

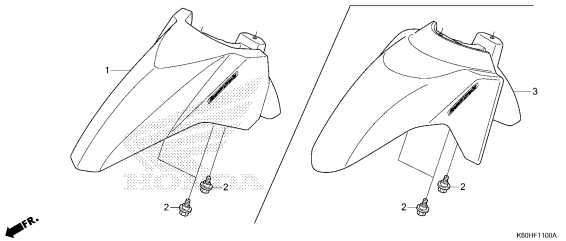

F-12

FRONT COVER(ACB125CBFH)

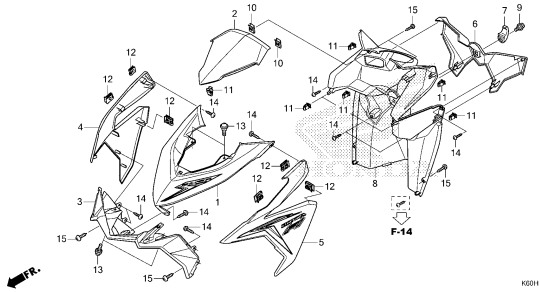

F-12-1

FRONT COVER(ACB125CBFK/L/M/N)

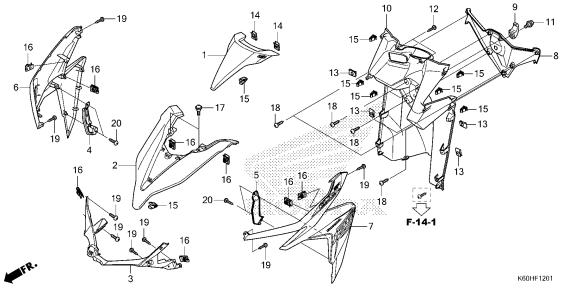

F-12-2

FRONT COVER(ACB125CBFP)

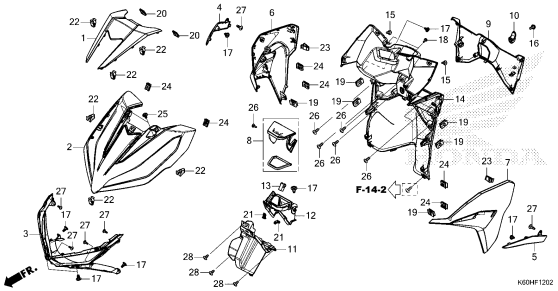

F-14

FLOOR STEP(ACB125CBFH)

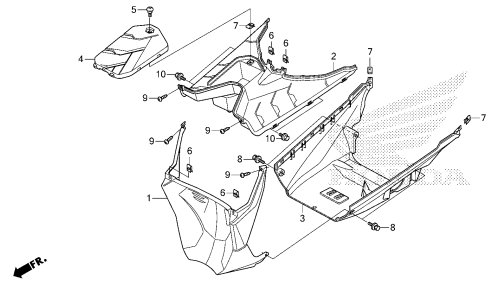

F-14-1

FLOOR STEP(ACB125CBFK/L/M/N)

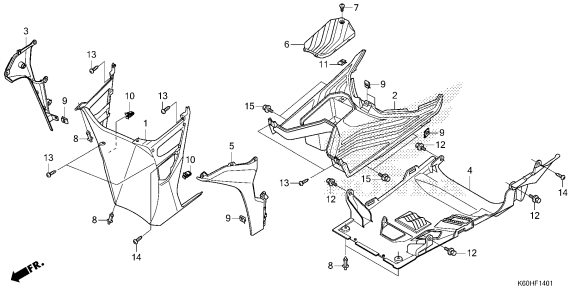

FRAME GROUP

F-14-2

FLOOR STEP(ACB125CBFP)

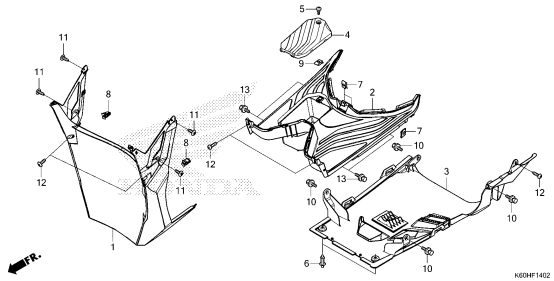

F-14-10

PILLION STEP

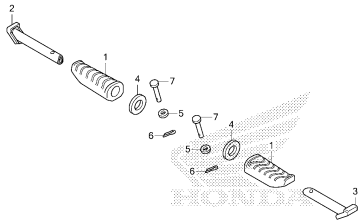

F-15

BODY COVER(ACB125CBFH)

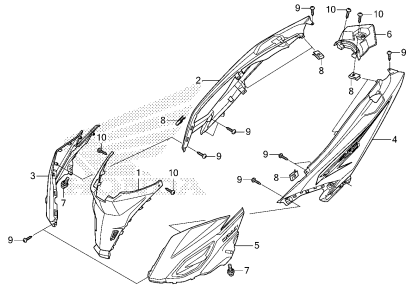

F-15-1

BODY COVER(ACB125CBFK/L/M/N)

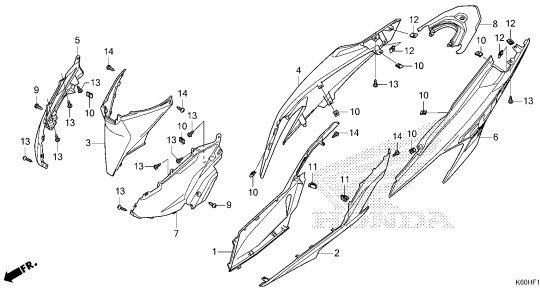

F-15-2

BODY COVER(ACB125CBFP)

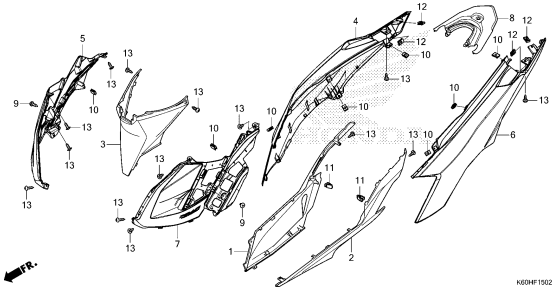

F-17

FRONT FORK

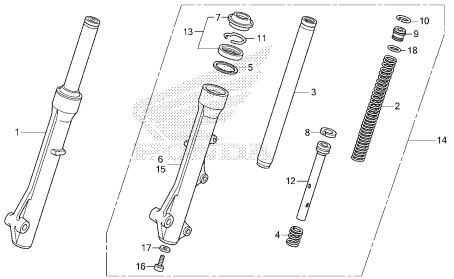

F-18

FRONT BRAKE CALIPER(ACB125CBFH)

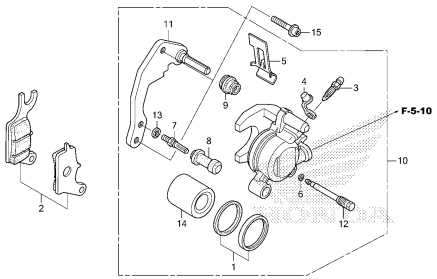

F-18-1

FRONT BRAKE CALIPER(ACB125CBFK/L/M/N/P)

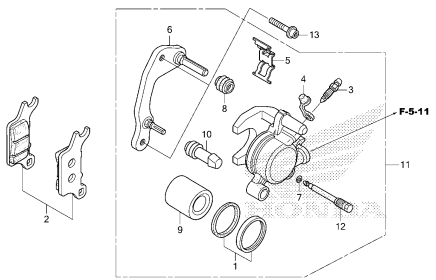

F-20-40

FRONT WHEEL(ACB125CBFH/K/L/M/N)

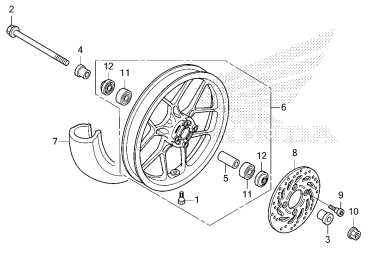

FRAME GROUP

F-20-41

FRONT WHEEL(ACB125CBFP)

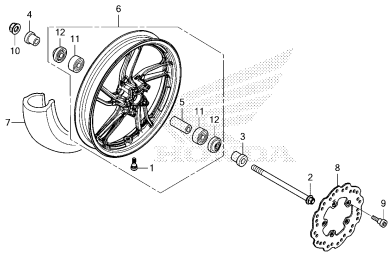

F-22-30

REAR WHEEL

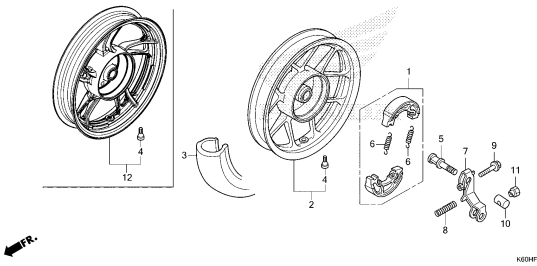

F-23

SWINGARM

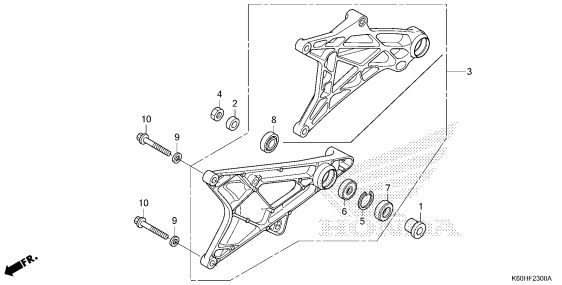

F-24

SEAT/LUGGAGE BOX

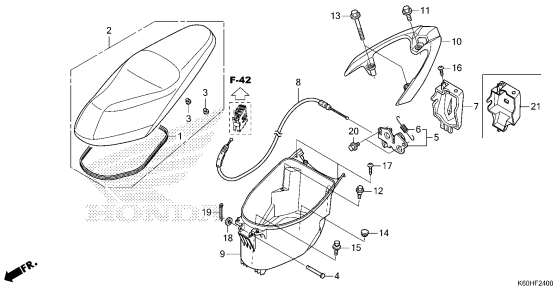

F-26

FUEL TANK(ACB125CBFH)

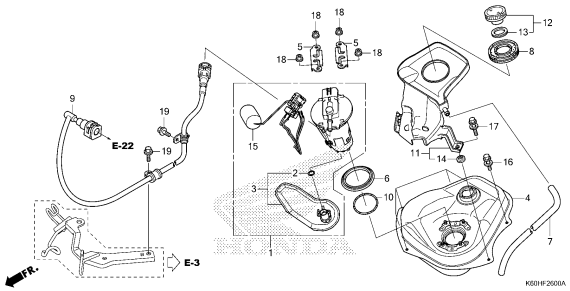

F-26-1

FUEL TANK(ACB125CBFK/L/M/N/P)

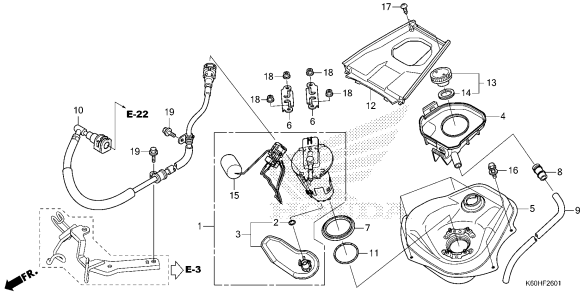

F-28

AIR CLEANER

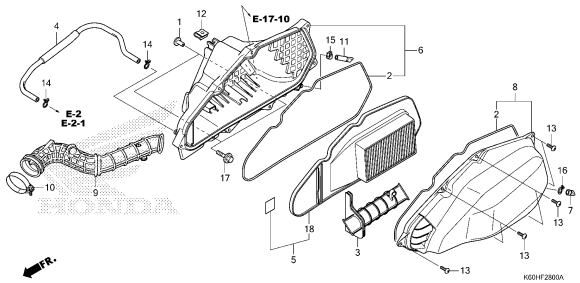

F-30

EXHAUST MUFFLER(ACB125CBFH)

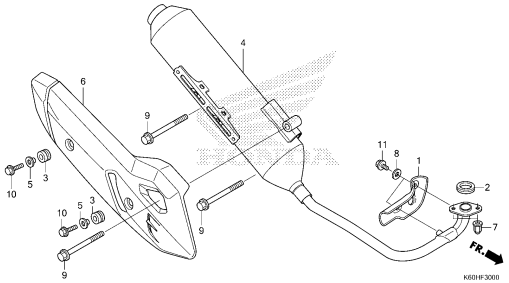

F-30-1

EXHAUST MUFFLER(ACB125CBFK/L/M/N/P)

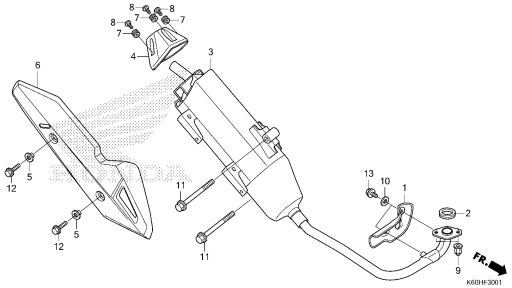

3

FRAME GROUP

F-35

STAND/KICK STARTER ARM

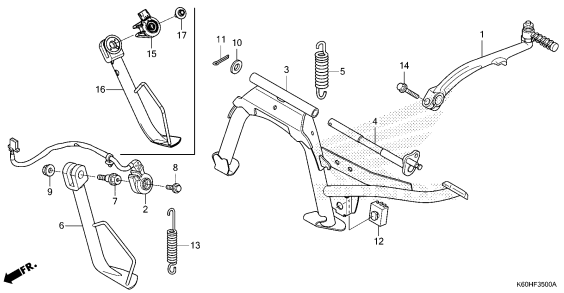

F-36

REAR CUSHION

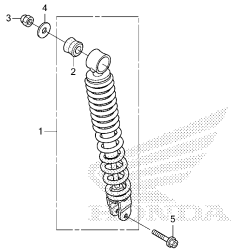

F-37

WINKER

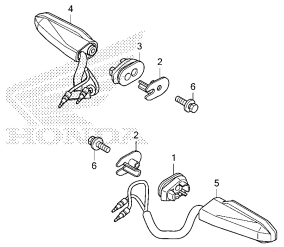

F-38

TAILLIGHT

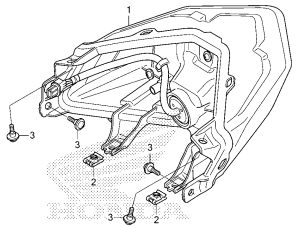

F-38-10

REAR COMBINATION LIGHT

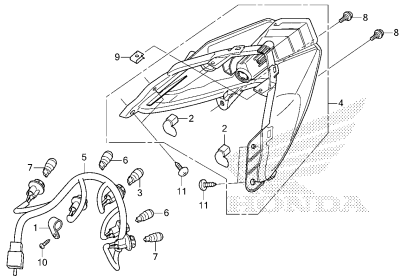

F-39

REAR FENDER/LICENSE LIGHT(ACB125CBFH)

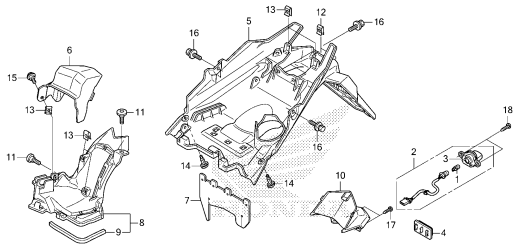

F-39-1

REAR FENDER/LICENSE LIGHT
(ACB125CBFK/L/M/N/P)

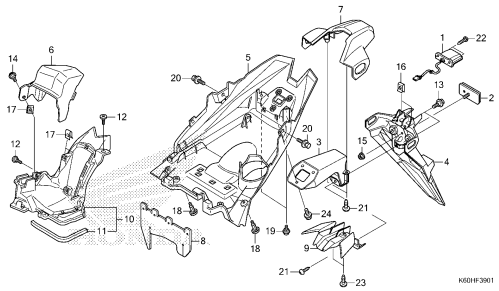

F-40

BATTERY(ACB125CBFH/K/L/M/N)

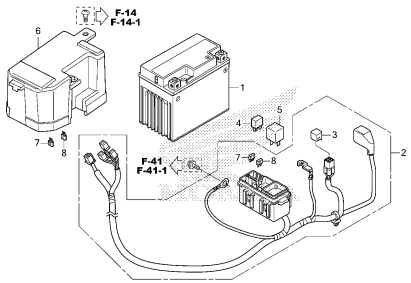

F-40-1

BATTERY(ACB125CBFP)

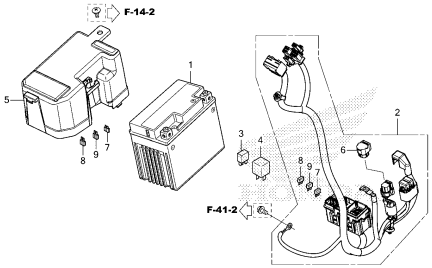

FRAME GROUP

F-41

WIRE HARNESS(ACB125CBFH)

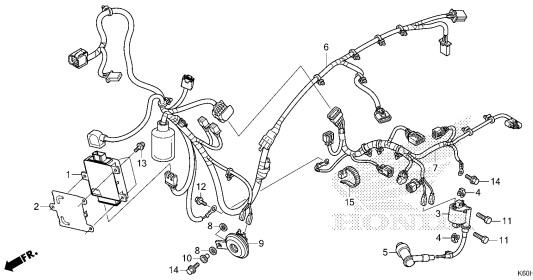

F-41-1

WIRE HARNESS(ACB125CBFK/L/M/N)

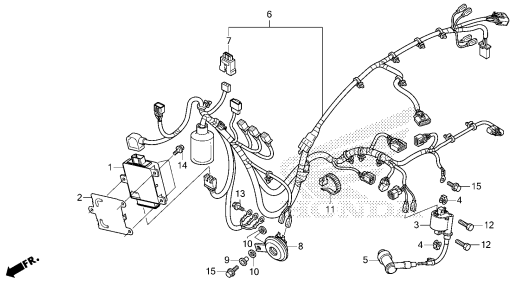

F-41-2

WIRE HARNESS(ACB125CBFP)

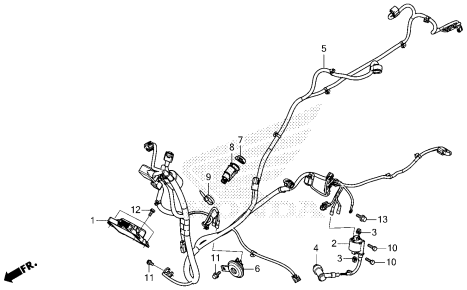

F-42

FRAME BODY

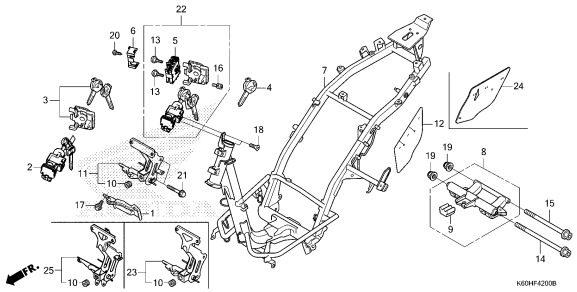

F-43

RESERVE TANK

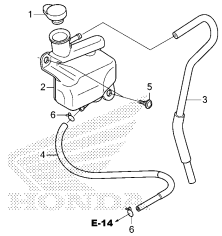

F-46

TOOLS

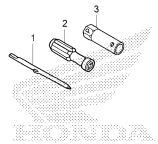

F-47

CAUTION LABEL(ACB125CBFH)

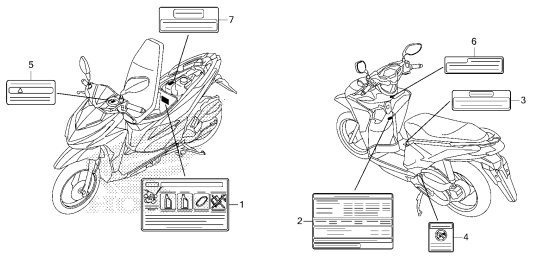

F-47-1

CAUTION LABEL(ACB125CBFK/L/M/N/P)

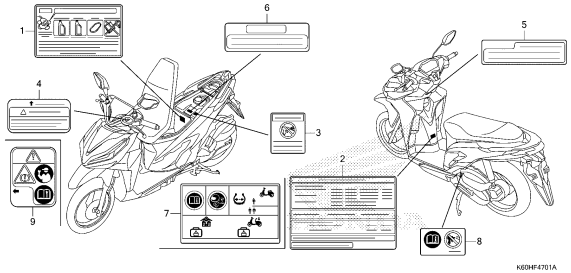

F-48

MARK/STRIPE(ACB125CBFH)

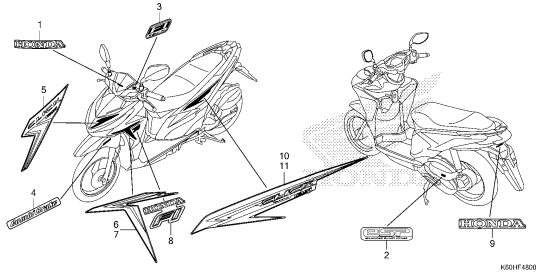

FRAME GROUP

F-48-1

MARK/STRIPE(ACB125CBFK/L/M/N)

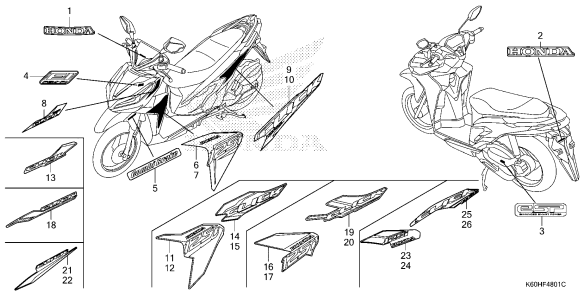

F-48-2

MARK/STRIPE(ACB125CBFP)

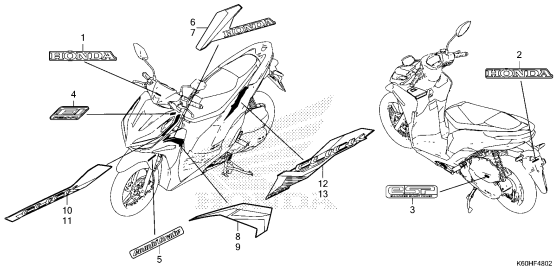

E-2 CYLINDER HEAD COVER(ACB125CBFH)

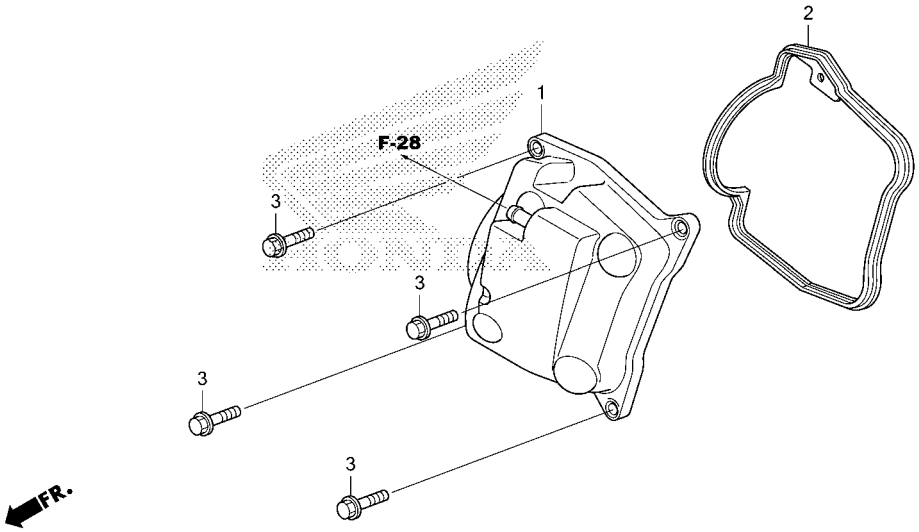

K60HE0200

Ref. No.	Part No.	Description	Reqd. QTY ACB125CBF H	K	L	M	N	P	Serial No.	Parts catalogue code
1	12310-KZR-700	COVER COMP., CYLINDER HEAD···	1	-	-	-	-	-		
2	12391-K59-A11	GASKET, CYLINDER HEAD COVER (PT. INDOKARLO PERKASA)	1	-	-	-	-	-		
	12391-KZR-600	GASKET, CYLINDER HEAD COVER··	1	-	-	-	-	-		
3	95701-06022-00	BOLT, FLANGE, 6X22·····	4	-	-	-	-	-		

E-2-1 CYLINDER HEAD COVER(ACB125CBFK/L/M/N/P)

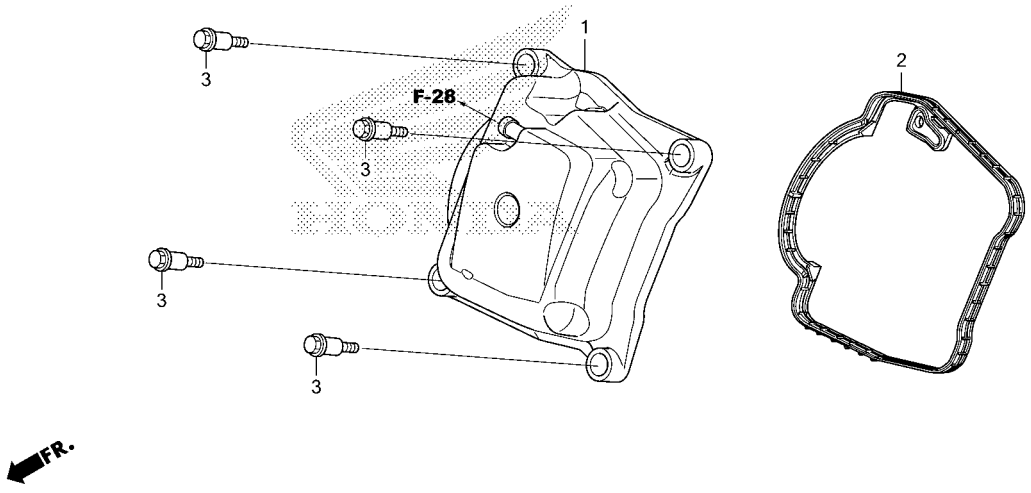

K60HE0201

Ref. No.	Part No.	Description	Reqd. QTY ACB125CBF H	K	L	M	N	P	Serial No.	Parts catalogue code
1	12310-K66-V00	COVER COMP., HEAD	-	1	1	1	1	1		
2	12391-K66-V01	GASKET, HEAD COVER	-	1	1	1	1	1		
3	90013-K66-V00	BOLT, HEAD COVER	-	4	4	4	4	4		

E-3 CYLINDER HEAD

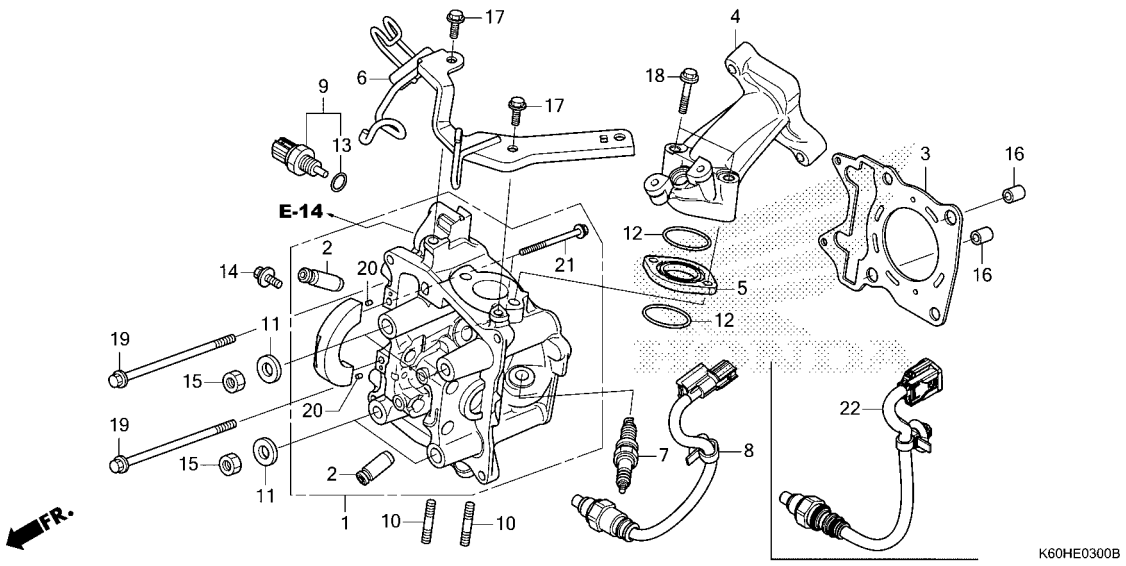

Ref. No.	Part No.	Description	Reqd. QTY ACB125CBF H	K	L	M	N	P	Serial No.	Parts catalogue code
1	12010-KZR-603	HEAD ASSY., CYLINDER	1	-	-	-	-	-		
	12010-K66-V00		-	1	1	1	1	1		
2	12204-KWN-P00	GUIDE, VALVE(O.S.)	2	2	2	2	2	2		
3	12251-K12-901	GASKET, CYLINDER HEAD	1	1	1	1	1	1		
	12251-KZR-601		1	-	-	-	-	-		
	12251-K77-V01		-	1	1	1	1	1		
	12252-K60-B60	GASKET, CYLINDER HEAD(O.S.) (0.75/1.00)	-	(1)	(1)	(1)	(1)	(1)		
4	17111-K60-B00	PIPE, IN.	1	1	1	1	1	1		
5	17119-KWN-710	INSULATOR, IN. PIPE	1	1	1	1	1	1		
6	17533-K60-B00	STAY COMP., FUEL HOSE CLAMPER	1	-	-	-	-	-		
	17533-K60-B60		-	1	1	1	1	1		
7	31926-KRM-841	PLUG, SPARK(CPR9EA-9)(NGK)	1	1	1	1	1	1		
	31926-KYT-901	PLUG, SPARK(U27EPR9)(DENSO)	1	1	1	1	1	1		
8	36532-K60-B01	SENSOR, OXYGEN(DENSO)	1	-	-	-	-	-		
	36532-K60-B61	SENSOR, OXYGEN	-	1	1	1	1	-		
9	37870-KZR-601	SENSOR ASSY., WATER TEMPERATURE(PANASONIC)	1	1	1	1	1	1		
10	90004-KGF-910	BOLT, STUD, 7X17	2	2	2	2	2	2		
11	90483-KWN-900	WASHER, 8MM	4	4	4	4	4	4		
12	91301-KRJ-901	O-RING, 29X2	2	2	2	2	2	2		
13	91307-PLC-004	O-RING, 9.5X1.9(PANASONIC)	1	1	1	1	1	1		
14	93404-06012-00	BOLT-WASHER, 6X12	1	1	1	1	1	1		
15	94030-08280	NUT, HEX., 8MM	4	4	4	4	4	4		
16	94301-10160	DOWEL PIN, 10X16	2	2	2	2	2	2		
17	95701-06014-00	BOLT, FLANGE, 6X14	2	2	2	2	2	2		

E-3 CYLINDER HEAD

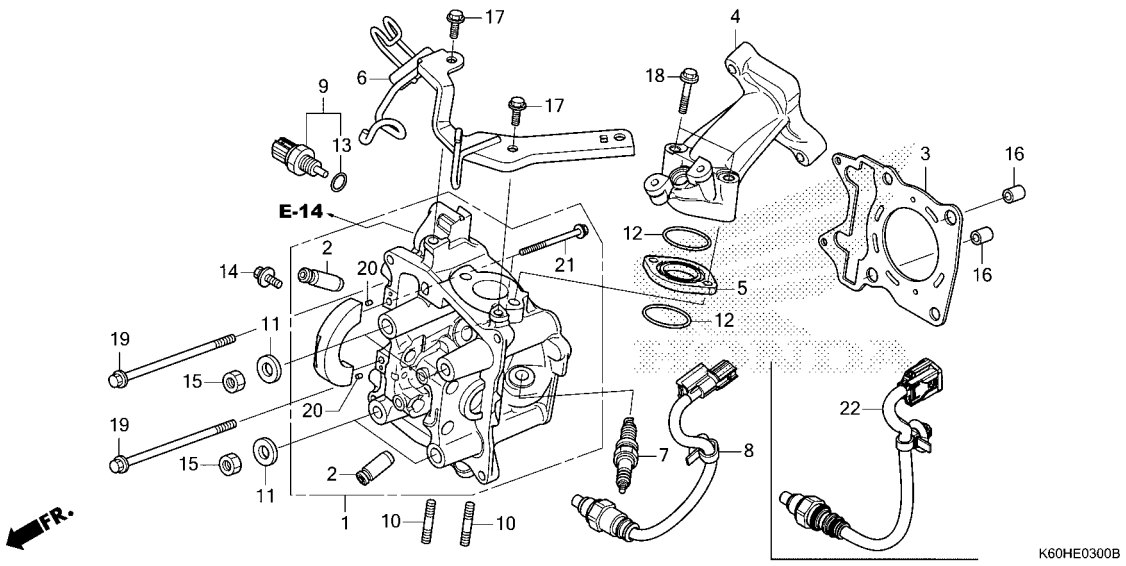

Ref. No.	Part No.	Description	Reqd. QTY ACB125CBF H	K	L	M	N	P	Serial No.	Parts catalogue code
18	95701-06040-00	BOLT, FLANGE, 6X40	2	2	2	2	2	2		
19	95701-06095-00	BOLT, FLANGE, 6X95	2	2	2	2	2	2		
20	94303-03050	DOWEL PIN, 3X5	2	2	2	2	2	2		
21	96001-06080-00	BOLT, FLANGE, 6X80	2	2	2	2	2	2		
22	36532-K3A-V01	SENSOR, OXYGEN	-	-	-	-	-	1		

CAMSHAFT/VALVE

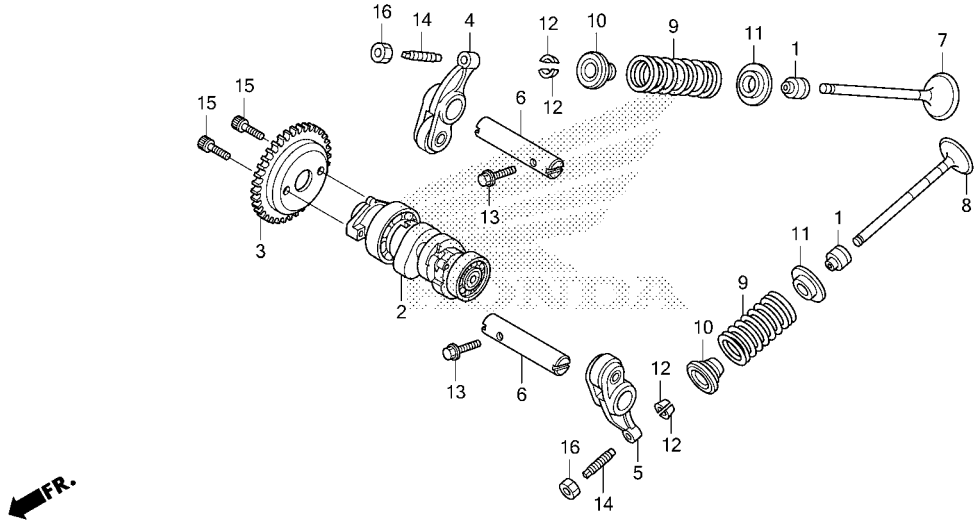

K60HE0400

Ref. No.	Part No.	Description	Reqd. QTY ACB125CBF H	K	L	M	N	P	Serial No.	Parts catalogue code
1	12209-GB4-681	SEAL, VALVE STEM(NOK)·····	2	2	2	2	2	2		
	12209-GB4-682	SEAL, VALVE STEM(ARAI)·····	2	2	2	2	2	2		
2	14100-K35-J00	CAMSHAFT COMP.·····	1	-	-	-	-	-		
	14100-K77-V00	·····	-	1	1	1	1	1		
3	14321-KWN-900	SPROCKET, CAM(34T)·····	1	1	1	1	1	1		
4	14430-KZR-600	ARM COMP., IN. VALVE ROCKER··	1	1	1	1	1	1		
5	14440-KZR-600	ARM COMP., EX. VALVE ROCKER··	1	1	1	1	1	1		
6	14451-KZR-600	SHAFT, ROCKER ARM·····	2	2	2	2	2	2		
7	14711-KWN-900	VALVE, IN.·····	1	1	1	1	1	1		
8	14721-KWN-900	VALVE, EX.·····	1	1	1	1	1	1		
9	14751-KZR-601	SPRING, VALVE·····	2	2	2	2	2	2		
	14751-KWN-900	·····	2	-	-	-	-	-		
10	14771-KWN-900	RETAINER, VALVE SPRING·····	2	2	2	2	2	2		
11	14775-KZR-600	SEAT, VALVE SPRING·····	2	2	2	2	2	2		
12	14781-MA6-000	COTTER, VALVE·····	4	4	4	4	4	4		
13	90002-KWB-600	BOLT, FLANGE, 5X12·····	2	2	2	2	2	2		
14	90012-KWB-600	SCREW, TAPPET ADJUSTING·····	2	2	2	2	2	2		
15	90083-KVB-900	BOLT, SOCKET KNOCK, 5MM·····	2	2	2	2	2	2		
16	90206-001-000	NUT, TAPPET ADJUSTING·····	2	2	2	2	2	2		

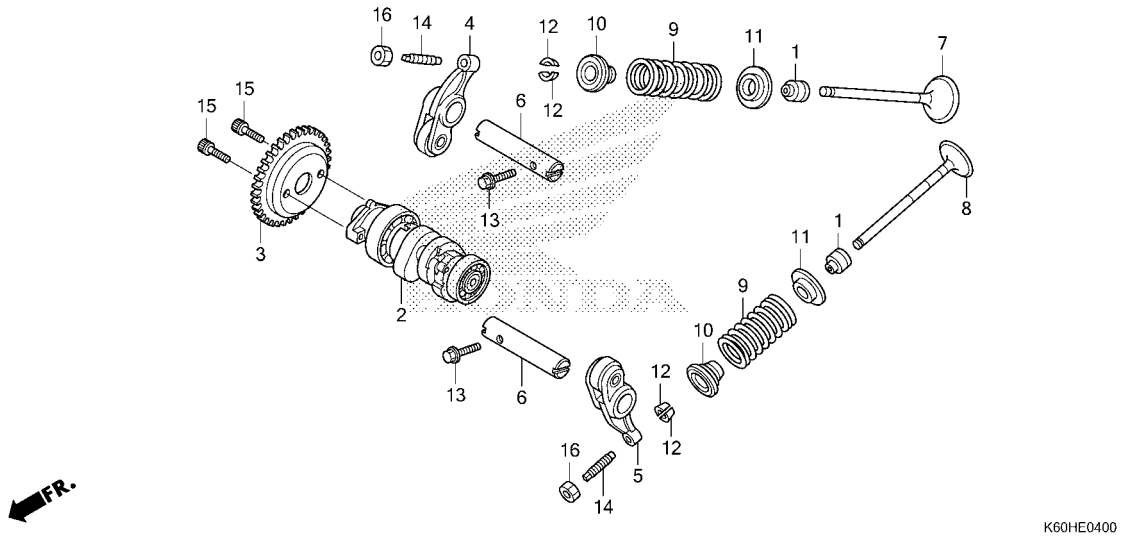

K60HE0400

E-5 CAM CHAIN/TENSIONER

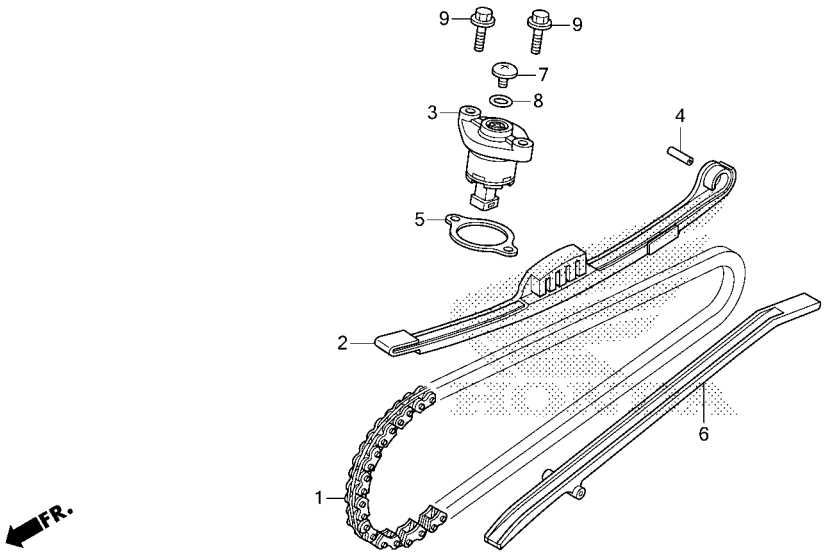

K60HE0500A

Ref. No.	Part No.	Description	Reqd. QTY ACB125CBF H	K	L	M	N	P	Serial No.	Parts catalogue code
1	14401-KSS-931	CHAIN, CAM(92L)(DAIDO)·····	1	-	-	-	-	-		
	14401-K97-T01	CHAIN, CAM (DID SCZ-0404 SV-92LE)	-	1	1	1	1	1		
2	14510-KZR-600	TENSIONER ASSY., CAM CHAIN···	1	1	1	1	1	1		
3	14520-KZR-602	LIFTER ASSY., TENSIONER·····	1	-	-	-	-	-		
	14520-K40-F01	·····	-	1	1	1	1	1		
4	14531-KZR-600	PIVOT, CAM CHAIN TENSIONER···	1	1	1	1	1	1		
5	14560-KZR-600	GASKET, TENSIONER LIFTER·····	1	1	1	1	1	1		
6	14611-KWN-900	GUIDE, CAM CHAIN·····	1	-	-	-	-	-		
	14611-K97-T00	·····	-	1	1	1	1	1		
7	90005-KY7-000	SCREW, PAN, 6X6·····	1	1	1	1	1	1		
8	91306-MG3-000	O-RING, 1.5X9.5·····	1	1	1	1	1	1		
9	95701-06022-00	BOLT, FLANGE, 6X22·····	2	2	2	2	2	2		

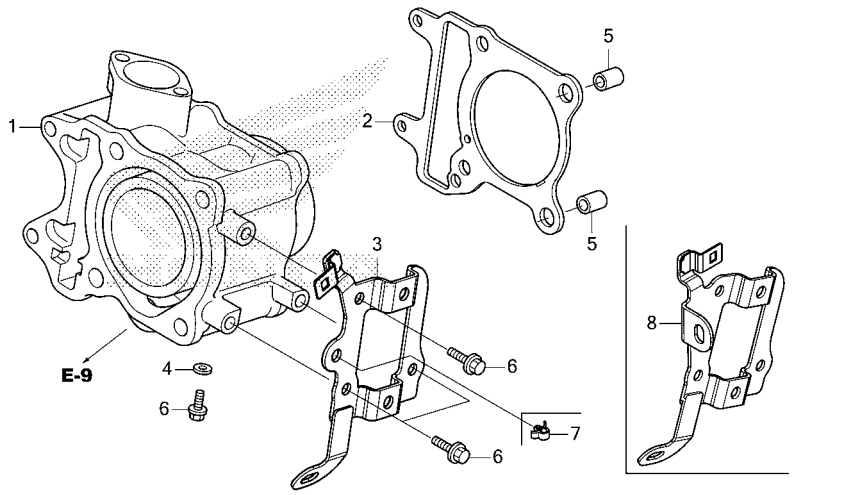

K60HE0600B

Ref. No.	Part No.	Description	Reqd. QTY ACB125CBF H	K	L	M	N	P	Serial No.	Parts catalogue code
1	12100-KZR-600	CYLINDER COMP.	1	1	1	1	1	1		
2	12191-KZR-600	GASKET, CYLINDER	1	1	1	1	1	1		
3	30515-K35-V00	STAY COMP., IGNITION COIL	1	-	-	-	-	-		
	30515-K60-B60		-	1	1	1	1	-		
4	90463-ML7-000	WASHER, SEALING, 6.5MM	1	1	1	1	1	1		
5	94301-10160	DOWEL PIN, 10X16	2	2	2	2	2	2		
6	95701-06014-00	BOLT, FLANGE, 6X14	4	4	4	4	4	4		
7	91504-SL0-003	CLIP, HOOD OPEN WIRE	-	1	1	1	1	-		
8	30515-K2V-N40	STAY COMP., IGNITION COIL	-	-	-	-	-	1		

WATER PUMP

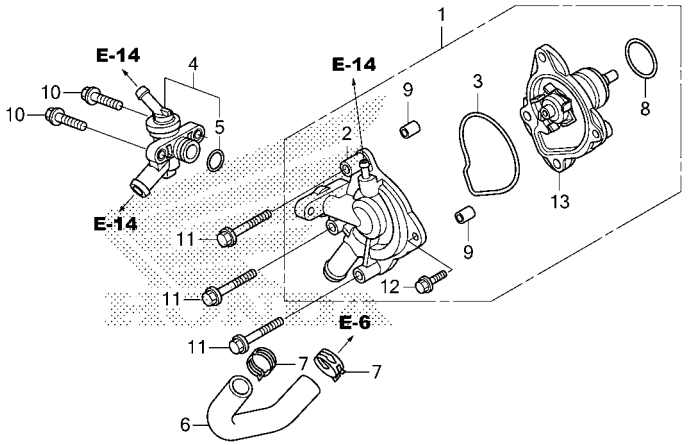

K60HE0900A

Ref. No.	Part No.	Description	Reqd. QTY ACB125CBF H	K	L	M	N	P	Serial No.	Parts catalogue code
1	19200-KWN-901	PUMP ASSY., WATER	1	-	-	-	-	-		
2	19220-KWN-901	COVER COMP., WATER PUMP	1	1	1	1	1	1		
3	19226-KWN-900	GASKET, WATER PUMP COVER	1	1	1	1	1	1		
4	19300-K59-A11	THERMOSTAT ASSY.	1	1	1	1	1	1		
5	19381-KWN-900	O-RING	1	1	1	1	1	1		
6	19503-KWN-900	HOSE C, WATER	1	1	1	1	1	1		
7	90701-KWN-901	CLAMP, WATER HOSE, 24MM	2	2	2	2	2	2		
8	91302-KWN-900	O-RING, 34X2	1	1	1	1	1	1		
9	94301-08100	DOWEL PIN, 8X10	2	2	2	2	2	2		
10	95701-06022-00	BOLT, FLANGE, 6X22	2	2	2	2	2	-		
	95701-06020-00	BOLT, FLANGE, 6X20	-	-	-	-	-	2		
11	95701-06040-00	BOLT, FLANGE, 6X40	3	3	3	3	3	3		
12	96001-06016-00	BOLT, FLANGE, 6X16	1	1	1	1	1	1		
13	19210-K66-V00	PUMP COMP., WATER	-	1	1	1	1	1		

A.C.G. STARTER

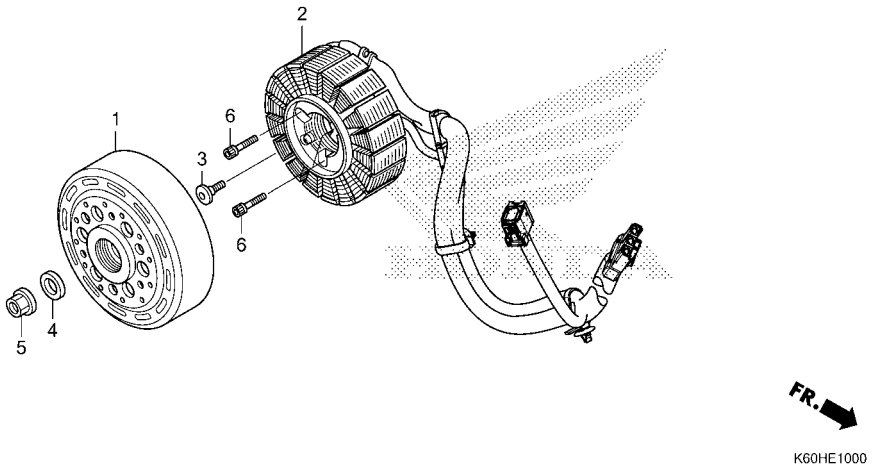

Ref. No.	Part No.	Description	Reqd. QTY ACB125CBF H	K	L	M	N	P	Serial No.	Parts catalogue code
1	31210-KZR-601	FLYWHEEL COMP.	1	-	-	-	-	-		
	31210-K96-V01		-	1	1	1	1	1		
2	31220-K60-B02	STATOR COMP.	1	-	-	-	-	-		
	31220-K60-B61		-	1	1	1	1	-		
	31220-K2V-N42		-	-	-	-	-	1		
3	90001-KWR-000	BOLT, SOCKET, 6X18	1	1	1	1	1	1		
4	90439-KWZ-900	WASHER, 12X24X2.3	1	1	1	1	1	1		
5	94050-12000	NUT, FLANGE, 12MM	1	1	1	1	1	1		
6	96700-06025-00	BOLT, SOCKET, 6X25	3	3	3	3	3	3		

OIL PUMP

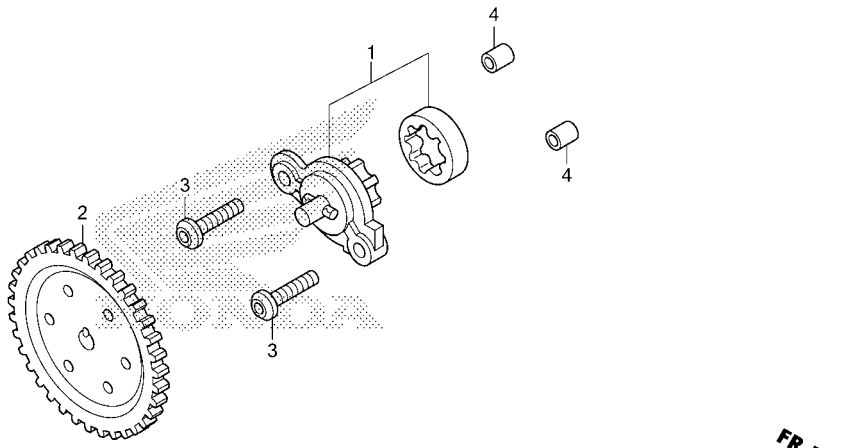

K60HE1100

Ref. No.	Part No.	Description	Reqd. QTY ACB125CBF H	K	L	M	N	P	Serial No.	Parts catalogue code
1	15010-KWN-900	PUMP SET, OIL	1	1	1	1	1	1		
2	15133-KWN-900	GEAR, OIL PUMP DRIVEN(35T)	1	1	1	1	1	1		
3	90003-KWN-900	BOLT, SPECIAL, 6X23.5	2	2	2	2	2	2		
4	94301-08100	DOWEL PIN, 8X10	2	2	2	2	2	2		

E-13 LEFT SIDE COVER(ACB125CBFH)

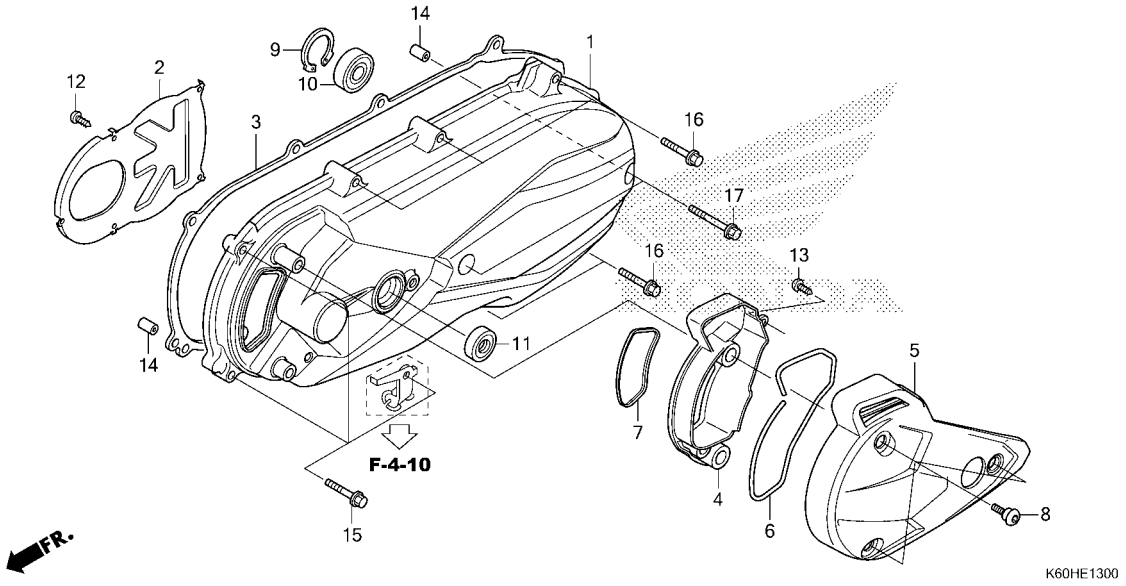

Ref. No.	Part No.	Description	Reqd. QTY ACB125CBF H	K	L	M	N	P	Serial No.	Parts catalogue code
1	11341-K59-A10	COVER, L. SIDE	1	-	-	-	-	-		
2	11342-K59-A10	PLATE, L. COVER	1	-	-	-	-	-		
3	11395-KZR-600	GASKET, L. COVER	1	-	-	-	-	-		
4	19641-K59-A10	DUCT, L. COVER	1	-	-	-	-	-		
5	19642-K59-A10	CAP, L. COVER	1	-	-	-	-	-		
6	19748-KZR-600	SEAL, DUCT	1	-	-	-	-	-		
7	19749-KVY-900	SEAL, L. DUCT COVER	1	-	-	-	-	-		
8	90001-KWR-000	BOLT, SOCKET, 6X18	3	-	-	-	-	-		
9	90652-KVB-900	CIRCLIP, INTERNAL, 32MM	1	-	-	-	-	-		
10	91005-KVB-900	BEARING COMP.(6002UU)(NTN)	1	-	-	-	-	-		
11	91212-K44-V01	OIL SEAL, 16X26X6(ARAI)	1	-	-	-	-	-		
12	93903-34120	SCREW, TAPPING, 4X8	5	-	-	-	-	-		
13	93903-34220	SCREW, TAPPING, 4X10	1	-	-	-	-	-		
14	94301-08140	DOWEL PIN, 8X14	2	-	-	-	-	-		
15	96001-06028-00	BOLT, FLANGE, 6X28	3	-	-	-	-	-		
16	96001-06040-00	BOLT, FLANGE, 6X40	5	-	-	-	-	-		
17	96001-06065-00	BOLT, FLANGE, 6X65	2	-	-	-	-	-		

E-13-1 LEFT SIDE COVER(ACB125CBFK/L/M/N/P)

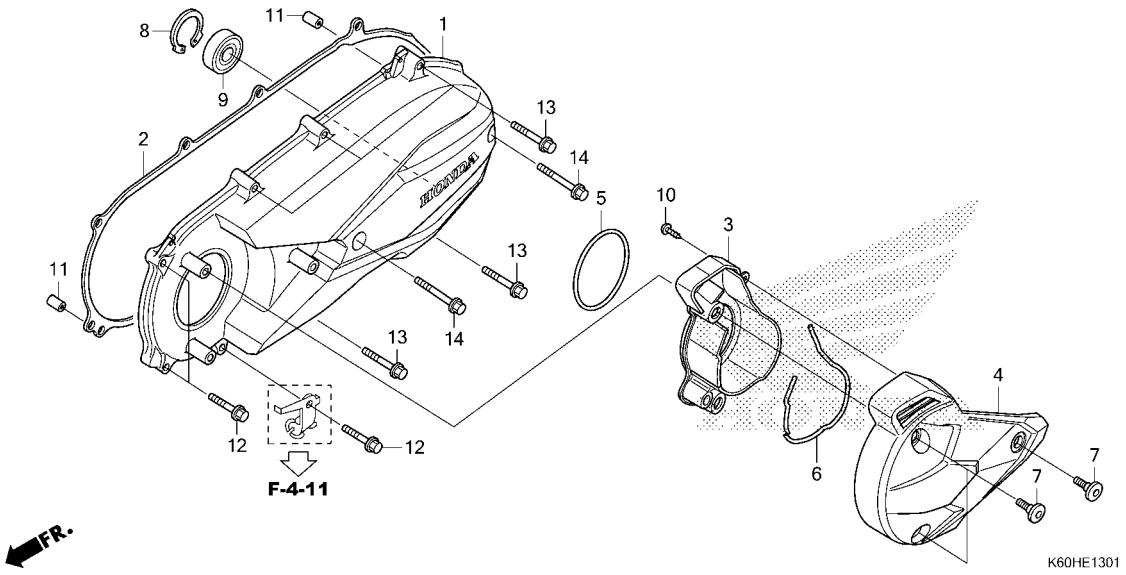

Ref. No.	Part No.	Description	Reqd. QTY ACB125CBF H	K	L	M	N	P	Serial No.	Parts catalogue code
1	11341-K66-V10	COVER, L. SIDE	-	1	1	1	1	1		
2	11395-KZR-600	GASKET, L. COVER	-	1	1	1	1	1		
3	19641-K66-V00	DUCT, L. COVER	-	1	1	1	1	1		
4	19642-K66-V00	CAP, L. COVER	-	1	1	1	1	1		
5	19645-KWN-900	SEAL, BELT COVER DUCT	-	1	1	1	1	1		
6	19748-K66-V00	SEAL, DUCT	-	1	1	1	1	1		
7	90001-KWR-000	BOLT, SOCKET, 6X18	-	3	3	3	3	3		
8	90652-KVB-900	CIRCLIP, INTERNAL, 32MM	-	1	1	1	1	1		
9	91005-KVB-900	BEARING COMP.(6002UU)(NTN)	-	1	1	1	1	1		
10	93903-34220	SCREW, TAPPING, 4X10	-	1	1	1	1	1		
11	94301-08140	DOWEL PIN, 8X14	-	2	2	2	2	2		
12	96001-06028-00	BOLT, FLANGE, 6X28	-	3	3	3	3	3		
13	96001-06040-00	BOLT, FLANGE, 6X40	-	5	5	5	5	5		
14	96001-06065-00	BOLT, FLANGE, 6X65	-	2	2	2	2	2		

RADIATOR

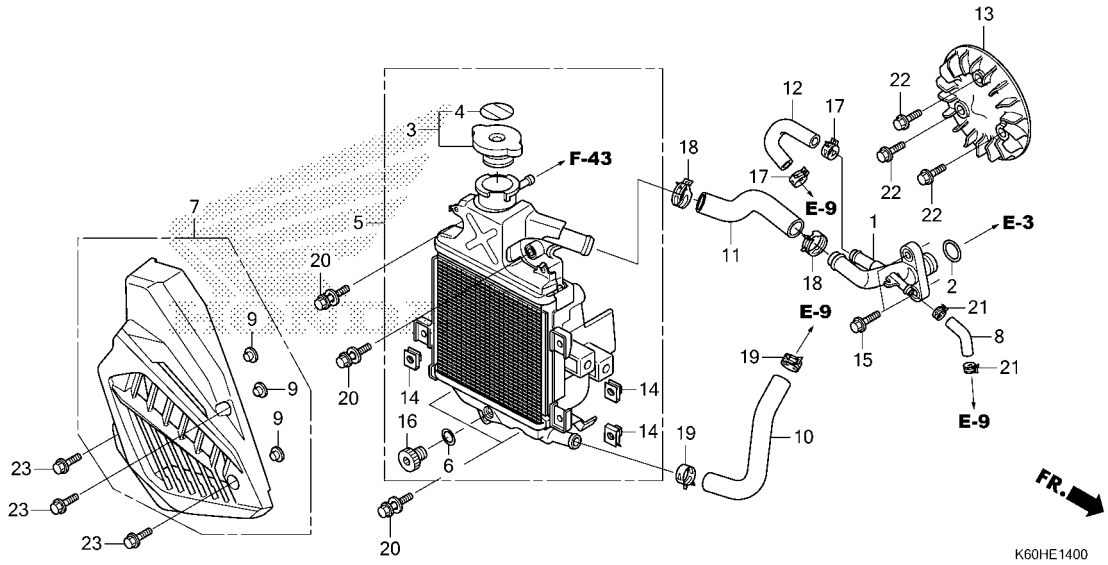

Ref. No.	Part No.	Description	Reqd. QTY ACB125CBF H	K	L	M	N	P	Serial No.	Parts catalogue code
1	12206-KZR-600	JOINT COMP., WATER HOSE	1	-	-	-	-	-		
	12206-K66-V00		-	1	1	1	1	1		
2	12207-KWN-900	O-RING, 15.4X2	1	1	1	1	1	1		
3	19037-KVB-902	CAP COMP., RADIATOR(T.RAD)	1	1	1	1	1	1		
	19037-KVB-930	CAP COMP., RADIATOR (PT.THREESTAR)	1	-	-	-	-	-		
	19037-KVB-931	(PT.THREESTAR)	-	1	1	1	1	1		
4	19046-KVB-902	LABEL, RADIATOR CAP(T.RAD)	1	1	1	1	1	1		
	19046-KVB-930	LABEL, RADIATOR CAP (PT.THREESTAR)	1	1	1	1	1	1		
5	19100-K60-B01	RADIATOR ASSY.(T.RAD)	1	-	-	-	-	-		
	19100-K60-B02	RADIATOR ASSY. (PT.THREESTAR INDONESIA)	1	-	-	-	-	-		
	19100-K60-B61	RADIATOR ASSY.(T.RAD)	-	1	1	1	1	1		
	19100-K60-B62	RADIATOR ASSY. (PT.THREESTAR INDONESIA)	-	1	1	1	1	1		
6	19109-GET-003	SEAL, DRAIN (T.RAD)	1	1	1	1	1	1		
	19109-KZR-602	O-RING, 7.8X1.9 (PT.THREESTAR)	1	1	1	1	1	1		
7	19150-K59-A10	COVER COMP., RADIATOR	1	1	1	1	1	1		
8	19332-KWN-900	TUBE, AIR BREATHER	1	1	1	1	1	1		
9	19416-KEY-900	COLLAR	3	3	3	3	3	3		
10	19501-KZR-600	HOSE A, WATER	1	1	1	1	1	1		
11	19502-KZR-600	HOSE B, WATER	1	1	1	1	1	1		
12	19504-KZR-600	HOSE, BYPASS	1	1	1	1	1	1		

RADIATOR

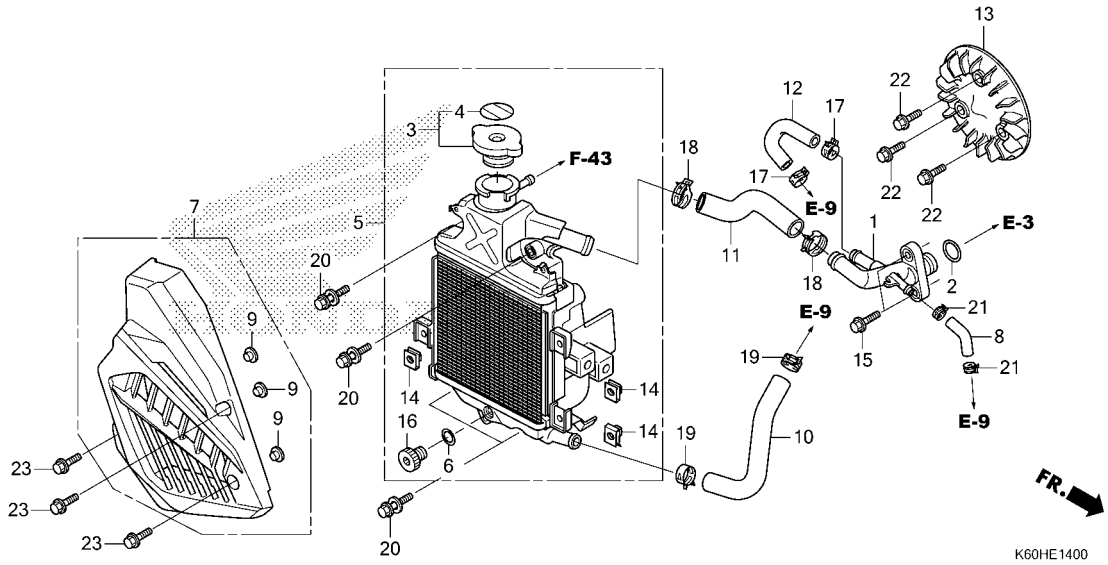

Ref. No.	Part No.	Description	Reqd. QTY ACB125CBF H	K	L	M	N	P	Serial No.	Parts catalogue code
13	19510-K60-B00	FAN COMP., COOLING	1	-	-	-	-	-		
	19510-K97-T00		-	1	1	1	1	1		
14	84601-HA7-670	NUT, FENDER SETTING	3	3	3	3	3	3		
15	90004-GHB-660	BOLT, FLANGE, 6X22(NSHF)	2	2	2	2	2	2		
16	90103-GET-003	BOLT, DRAIN (T.RAD)	1	1	1	1	1	1		
	90103-KZR-602	DRAIN PLUG (PT.THREESTAR)	1	1	1	1	1	1		
17	90678-MR1-690	CLIP, HOSE	2	2	2	2	2	2		
	90601-K27-V01	CLAMP, HOSE(D15.5)	-	2	2	2	2	2		
18	90701-KWN-901	CLAMP, WATER HOSE, 24MM	2	2	2	2	2	2		
19	90701-MF5-003	CLAMP, WATER HOSE, 21MM	2	2	2	2	2	2		
	90602-K27-V01	CLAMP, HOSE(D20)	-	2	2	2	2	2		
	90701-GGZ-J01	CLAMP, WATER HOSE, 21MM	-	2	2	2	2	2		
20	93401-06025-08	BOLT-WASHER, 6X25	4	4	4	4	4	4		
21	95002-41050-08	CLAMP, TUBE(D10.5)	2	2	2	2	2	2		
22	95701-06016-00	BOLT, FLANGE, 6X16	3	3	3	3	3	3		
23	96001-06016-07	BOLT, FLANGE, 6X16	3	3	3	3	3	3		

DRIVE FACE

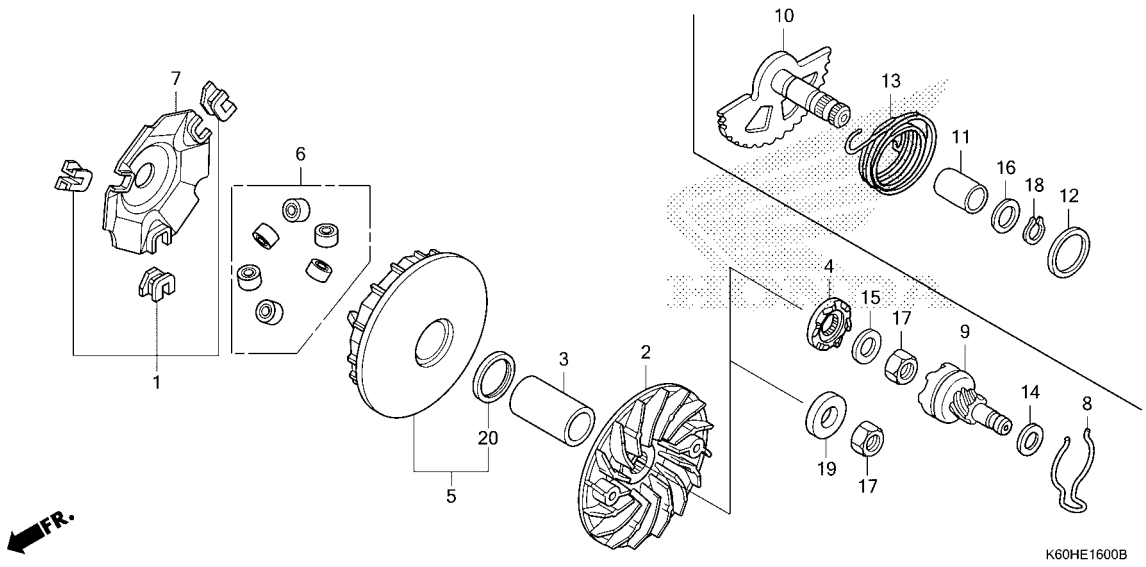

Ref. No.	Part No.	Description	Reqd. QTY ACB125CBF H	K	L	M	N	P	Serial No.	Parts catalogue code
1	22011-KWN-900	PIECE SET, SLIDE	1	1	1	1	1	1		
2	22102-KZR-600	FACE, DRIVE	1	1	1	1	1	1		
3	22105-KWN-900	BOSS, DRIVE FACE	1	1	1	1	1	1		
4	22109-KZL-840	RATCHET, STARTER	1	-	-	-	-	-		
5	22110-K35-V00	FACE COMP., MOVABLE DRIVE	1	1	1	1	1	1		
6	22123-KWN-640	ROLLER SET, WEIGHT	1	1	1	1	1	1		
7	22131-KWN-900	PLATE, RAMP	1	1	1	1	1	1		
8	28223-KZL-840	SPRING, KICK DRIVEN GEAR	1	-	-	-	-	-		
9	28230-KZR-600	GEAR COMP., KICK DRIVEN(7T)	1	-	-	-	-	-		
10	28250-KZR-600	SPINDLE COMP., KICK STARTER	1	-	-	-	-	-		
11	28253-KVB-900	BUSH, KICK SPINDLE	1	-	-	-	-	-		
12	28255-GS6-000	COLLAR, KICK BOSS	1	-	-	-	-	-		
13	28281-KZL-C00	SPRING, KICK RETURN	1	-	-	-	-	-		
14	90412-KZL-840	WASHER, THRUST, 10MM	1	-	-	-	-	-		
15	90426-KVB-900	WASHER, SPECIAL, 14MM	1	-	-	-	-	-		
16	90439-443-740	WASHER, 16X22	1	-	-	-	-	-		
17	94030-14200	NUT, HEX., 14MM	1	1	1	1	1	1		
18	94511-16000	CIRCLIP, EXTERNAL, 16MM	1	-	-	-	-	-		
19	90401-KWN-900	WASHER, 15X29X7	-	1	1	1	1	1		
20	91203-K35-V01	OIL SEAL, 24X31X3.5	1	1	1	1	1	1		

E-17 DRIVEN FACE

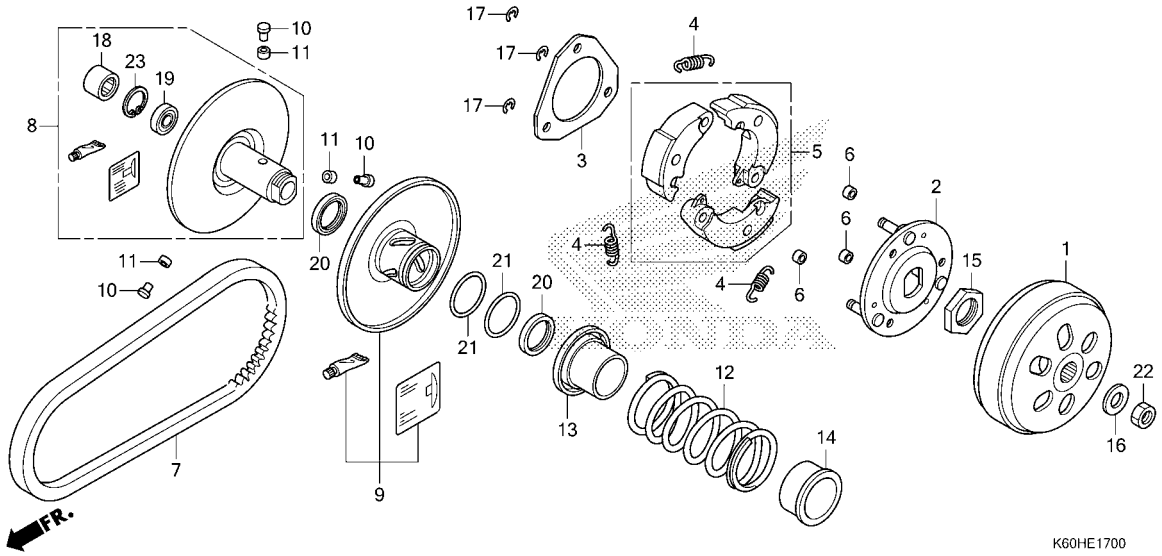

Ref. No.	Part No.	Description	Reqd. QTY ACB125CBF H	K	L	M	N	P	Serial No.	Parts catalogue code
1	22100-KWN-900	OUTER COMP., CLUTCH	1	1	1	1	1	1		
2	22350-GFM-900	PLATE COMP., DRIVE	1	1	1	1	1	1		
	22350-KVB-900		1	1	1	1	1	1		
	22350-K97-T01		-	1	1	1	1	1		
3	22361-KVB-900	PLATE, CLUTCH SIDE	1	1	1	1	1	1		
4	22401-KVB-900	SPRING, CLUTCH	3	3	3	3	3	3		
5	22535-K35-V00	WEIGHT SET, CLUTCH	1	-	-	-	-	-		
	22535-K12-V00		-	1	1	1	1	1		
6	22804-148-000	RUBBER, CLUTCH DAMPER	3	3	3	3	3	3		
7	23100-K35-V01	BELT, DRIVE	1	1	1	1	1	1		
8	23205-K35-V00	FACE SET, DRIVEN	1	-	-	-	-	-		
	23205-K59-A70		-	1	1	1	1	1		
9	23224-K35-V00	FACE SET, MOVABLE DRIVEN	1	-	-	-	-	-		
	23224-K60-B60		-	1	1	1	1	1		
10	23225-KSY-900	PIN, ROLLER GUIDE	3	3	3	3	3	3		
11	23226-KVB-900	ROLLER, GUIDE	3	3	3	3	3	3		
12	23233-K35-V00	SPRING, DRIVEN FACE	1	1	1	1	1	1		
13	23237-K35-V00	COLLAR, SEAL	1	1	1	1	1	1		
14	23238-KVB-900	COLLAR, SPRING	1	1	1	1	1	1		
15	90202-KN7-670	NUT, SPECIAL, 28MM	1	1	1	1	1	1		
16	90441-GY6-940	WASHER, 12.2X29X2.5	1	1	1	1	1	1		
17	90605-166-720	CIRCLIP, 7MM	3	3	3	3	3	3		
18	91001-KCW-003	BEARING, NEEDLE, 20X29X18(NTN)	1	1	1	1	1	1		
	91109-KVY-902	BEARING, NEEDLE, 20X29X18 (SCHAEFFLER)	1	1	1	1	1	1		

E-17 DRIVEN FACE

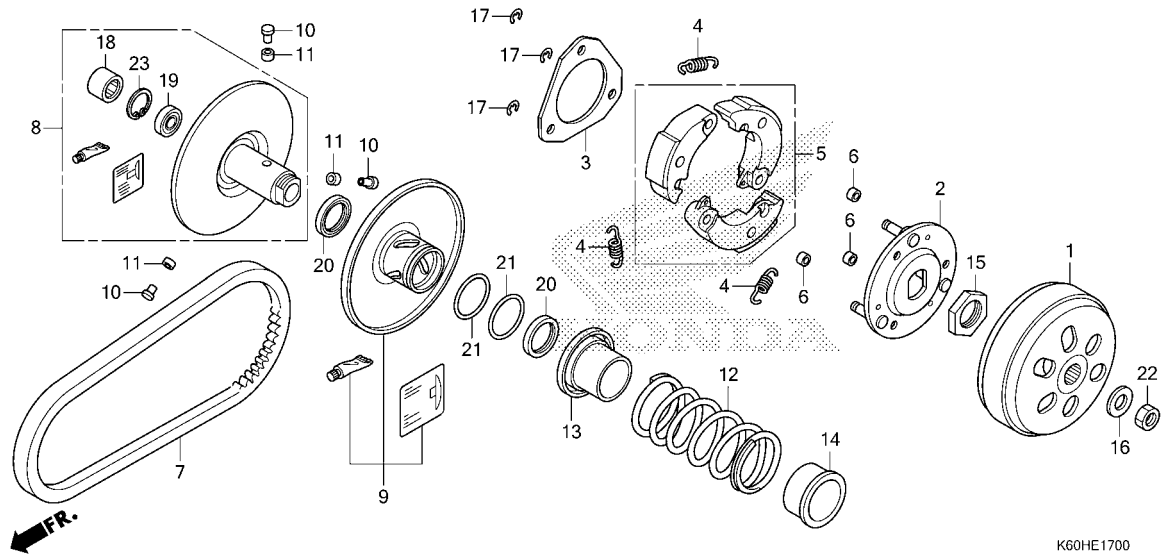

Ref. No.	Part No.	Description	Reqd. QTY ACB125CBF H	K	L	M	N	P	Serial No.	Parts catalogue code
18)	91109-GGC-G01	BEARING, NEEDLE, 20X29X18 (F.C.C.)	-	1	1	1	1	1		
19	91002-GA7-701	BEARING, RADIAL BALL, 6902U (NTN)	1	1	1	1	1	1		
	91009-KVY-961	BEARING, RADIAL BALL, 6902U (NSK)	1	1	1	1	1	1		
	91004-GGC-G01	BEARING, RADIAL BALL, 6902U (F.C.C.)	-	1	1	1	1	1		
	91009-K93-T01	·····	-	1	1	1	1	1		
20	91211-KN7-671	SEAL, DRIVEN FACE, 34X41X4···	2	2	2	2	2	2		
	91211-K97-T01	·····	-	2	2	2	2	2		
21	91384-KVB-900	O-RING, 38.8X1.9·····	2	2	2	2	2	2		
22	94030-12200	NUT, HEX., 12MM·····	1	1	1	1	1	1		
23	94520-28000	CIRCLIP, INTERNAL, 28MM·····	1	1	1	1	1	1		

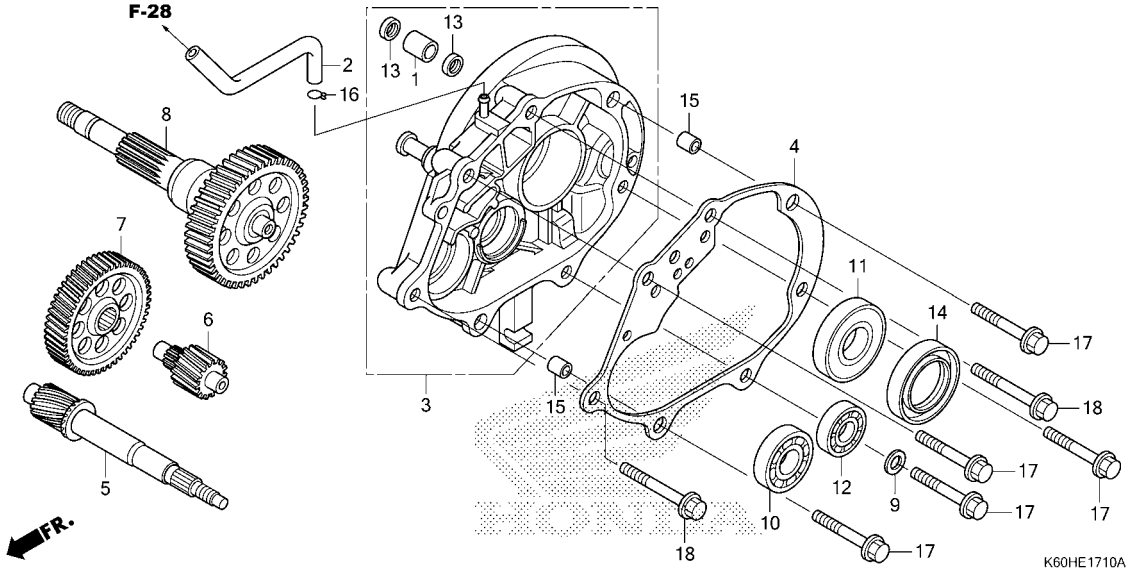

Ref. No.	Part No.	Description	Reqd. QTY ACB125CBF H	K	L	M	N	P	Serial No.	Parts catalogue code
1	11204-KGF-900	SLEEVE, RR. BRAKE CAM	1	1	1	1	1	1		
2	11211-KWN-980	TUBE, MISSION BREATHER	1	1	1	1	1	1		
3	21200-KZR-600	CASE COMP., TRANSMISSION	1	1	1	1	1	1		
4	21395-KZR-600	GASKET, TRANSMISSION CASE	1	1	1	1	1	1		
5	23411-KZR-601	SHAFT, DRIVE(17T)	1	-	-	-	-	-		
	23411-K60-B60	DRIVESHAFT(17T)	-	1	1	1	1	1		
6	23421-KZR-600	COUNTERSHAFT(13T)	1	-	-	-	-	-		
	23421-K59-A70		-	1	1	1	1	1		
7	23422-KWN-900	GEAR, COUNTERSHAFT(53T)	1	-	-	-	-	-		
	23422-K66-V00		-	1	1	1	1	1		
8	23430-K59-A10	GEAR COMP., FINAL(44T)	1	-	-	-	-	-		
	23430-K59-A70		-	1	1	1	1	1		
9	90495-MN5-000	WASHER, SEALING, 8MM	1	1	1	1	1	1		
10	91004-KZR-601	BEARING, RADIAL BALL, 6202 (NTN)	1	1	1	1	1	1		
	91004-KZR-602	BEARING, RADIAL BALL, 6202 (FUJIKOSHI)	1	1	1	1	1	1		
11	91006-KAB-004	BEARING, RADIAL BALL, 6205-2NSG(FUJIKOSHI)	1	1	1	1	1	1		
	91009-KWN-901	BEARING, RADIAL BALL, 6205UU (NTN)	1	1	1	1	1	1		
12	91006-KZR-601	BEARING, RADIAL BALL, 6201 (NTN)	1	1	1	1	1	1		
	91006-KZR-602	BEARING, RADIAL BALL, 6201 (FUJIKOSHI)	1	1	1	1	1	1		
13	91201-434-003	OIL SEAL, 14X20X3.2(ARAI)	2	2	2	2	2	2		
14	91204-K35-J01	OIL SEAL, 34X52X7(ARAI)	1	1	1	1	1	1		

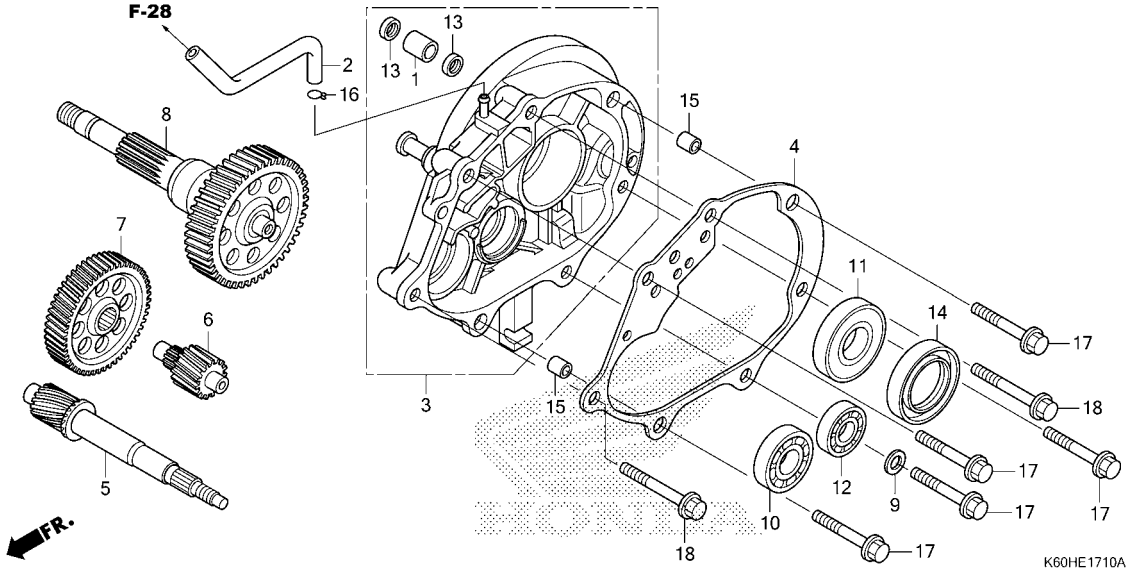

Ref. No.	Part No.	Description	Reqd. QTY ACB125CBF H	K	L	M	N	P	Serial No.	Parts catalogue code
14)	91204-K59-A11	OIL SEAL, 34X52X7(NOK)·····	1	1	1	1	1	1		
15	94301-10120	DOWEL PIN, 10X12·····	2	2	2	2	2	2		
16	95002-50000	CLIP, TUBE(C9)·····	1	1	1	1	1	1		
17	95701-08045-00	BOLT, FLANGE, 8X45·····	5	5	5	5	5	5		
18	95701-08055-00	BOLT, FLANGE, 8X55·····	2	2	2	2	2	2		

E-19-10 RIGHT CRANKCASE

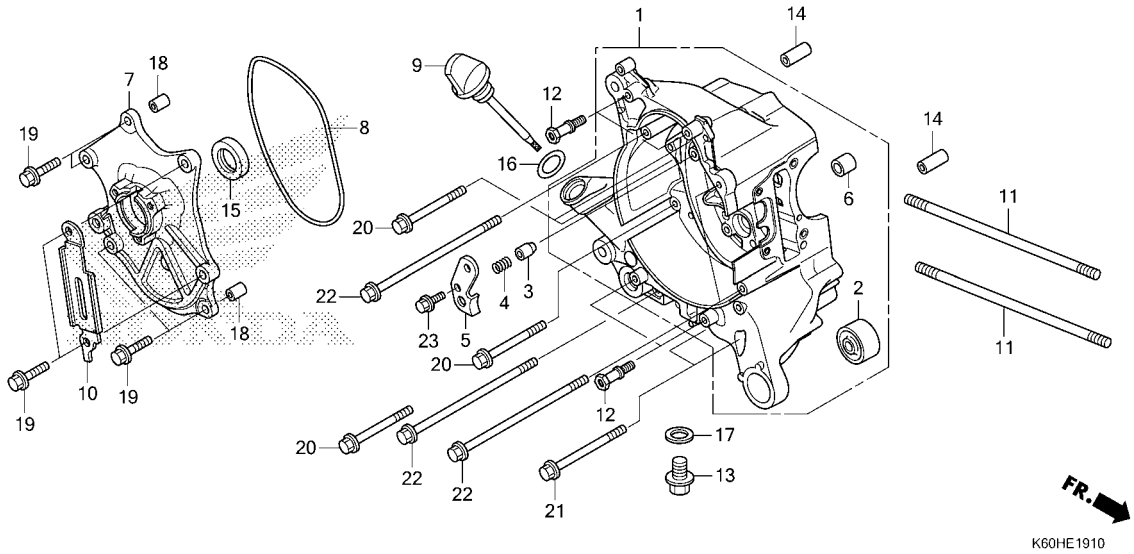

Ref. No.	Part No.	Description	Reqd. QTY ACB125CBF H	K	L	M	N	P	Serial No.	Parts catalogue code
1	11100-K59-A10	CRANKCASE COMP., R.	1	1	1	1	1	-		
	11100-K2V-N40	CRANKCASE COMP., R	-	-	-	-	-	1		
2	11103-KVB-901	BUSH, ENGINE HANGER RUBBER (HOKUSHIN)	1	1	1	1	1	1		
	11103-KVB-930	BUSH, ENGINE HANGER RUBBER	1	1	1	1	1	1		
3	11114-KWN-900	PLUG, BEARING PUSH	1	1	1	1	1	1		
4	11116-KZR-600	SPRING, BEARING PUSH	1	1	1	1	1	1		
5	11117-KWN-901	PLATE, BEARING PUSH	1	1	1	1	1	1		
6	11205-GBC-300	BUSH, MAIN STAND	1	1	1	1	1	1		
7	11361-KWN-901	BASE, STATOR	1	1	1	1	1	1		
8	11363-KWN-900	GASKET, STATOR BASE	1	1	1	1	1	1		
9	15651-KZR-600	GAUGE, OIL LEVEL	1	1	1	1	1	1		
10	32961-KWN-900	CLAMPER, A.C. GENERATOR CORD	1	1	1	1	1	1		
11	90031-KWN-900	BOLT A, STUD, 8X200.5	2	2	2	2	2	2		
12	90036-KZR-600	BOLT, RADIATOR DISTANCE	4	4	4	4	4	4		
13	90131-883-000	BOLT, DRAIN PLUG, 12X15	1	1	1	1	1	1		
14	90702-KWN-900	DOWEL PIN, SPECIAL, 6.3X10X30	2	2	2	2	2	2		
15	91201-K35-J01	OIL SEAL, 20.8X32X6(ARAI)	1	1	1	1	1	1		
	91201-K59-A11	OIL SEAL, 20.8X32X6(NOK)	1	1	1	1	1	1		
16	91307-035-000	O-RING, 18X3	1	1	1	1	1	1		
17	94109-12000	WASHER, DRAIN PLUG, 12MM	1	1	1	1	1	1		
18	94301-08100	DOWEL PIN, 8X10	2	2	2	2	2	2		
19	95701-06025-00	BOLT, FLANGE, 6X25	6	6	6	6	6	6		
20	95701-06065-00	BOLT, FLANGE, 6X65	4	4	4	4	4	4		
21	95701-06080-00	BOLT, FLANGE, 6X80	2	2	2	2	2	2		

E-19-10 RIGHT CRANKCASE

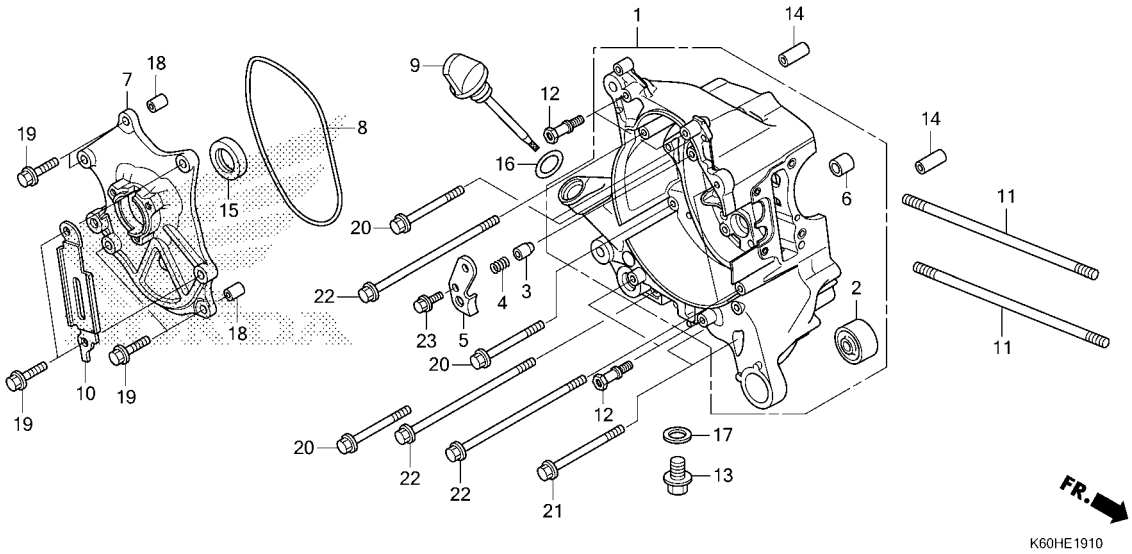

Ref. No.	Part No.	Description	Reqd. QTY ACB125CBF H	K	L	M	N	P	Serial No.	Parts catalogue code
22	95701-06130-00	BOLT, FLANGE, 6X130	4	4	4	4	4	4		
23	96001-06016-00	BOLT, FLANGE, 6X16	1	1	1	1	1	1		

E-19-20 LEFT CRANKCASE

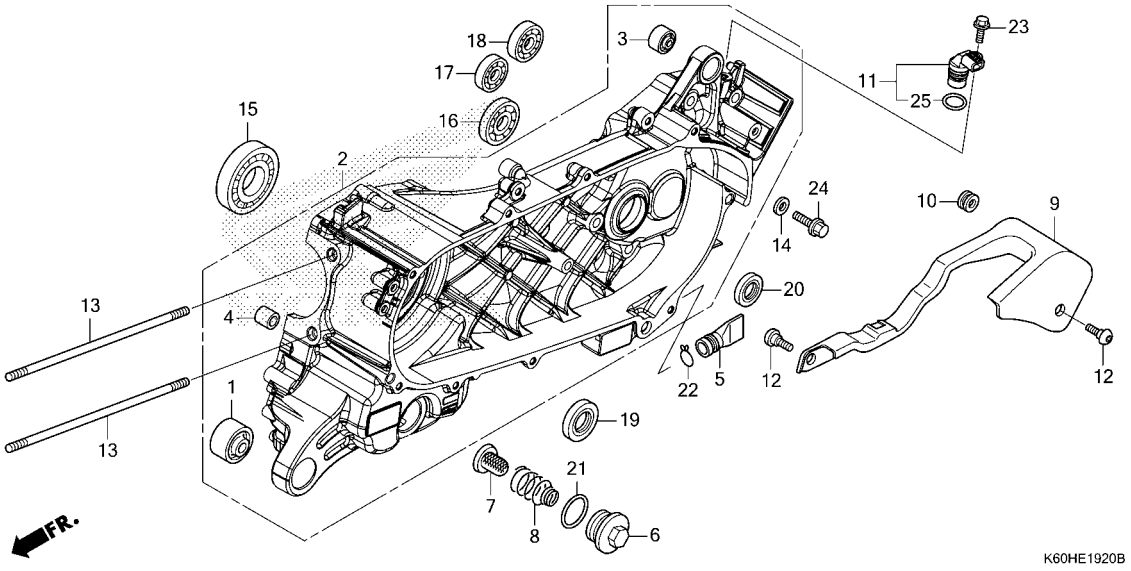

Ref. No.	Part No.	Description	Reqd. QTY ACB125CBF H	K	L	M	N	P	Serial No.	Parts catalogue code
1	11103-KVB-901	BUSH, ENGINE HANGER RUBBER (HOKUSHIN)	1	1	1	1	1	1		
	11103-KVB-930	BUSH, ENGINE HANGER RUBBER···	1	1	1	1	1	1		
2	11200-K35-J00	CRANKCASE COMP., L.·····	1	1	1	1	1	-		
	11200-K2V-N40	·····	-	-	-	-	-	1		
3	11203-K35-J00	BUSH, RR. CUSHION UNDER RUBBER	1	1	1	1	1	1		
	11203-KVB-901	BUSH, RR. CUSHION UNDER RUBBER (HOKUSHIN)	1	1	1	1	1	1		
4	11205-GBC-300	BUSH, MAIN STAND·····	1	1	1	1	1	1		
5	11343-KVG-900	TUBE, DRAIN·····	1	1	1	1	1	1		
6	12361-035-000	CAP, TAPPET ADJUSTING HOLE···	1	1	1	1	1	1		
7	15421-107-000	SCREEN, OIL FILTER·····	1	1	1	1	1	1		
	15421-KPL-900	·····	1	1	1	1	1	1		
8	15426-KVB-900	SPRING, OIL FILTER SCREEN····	1	1	1	1	1	1		
9	32112-KZR-600	PROTECTOR, SPEED SENSOR·····	1	1	1	1	1	1		
10	32113-KWN-900	GROMMET, SPEED SENSOR PROTECTOR	1	1	1	1	1	1		
11	37700-K48-A01	SENSOR ASSY., SPEED·····	1	1	1	1	1	1		
12	90001-KWR-000	BOLT, SOCKET, 6X18·····	2	2	2	2	2	2		
13	90032-KWN-900	BOLT B, STUD, 8X206·····	2	2	2	2	2	2		
14	90495-MN5-000	WASHER, SEALING, 8MM·····	1	1	1	1	1	1		
15	91002-KZR-602	BEARING, RADIAL BALL SPECIAL, 6207(FUJIKOSHI)	1	1	1	1	1	1		
	91002-KZR-603	BEARING, RADIAL BALL SPECIAL, 6207(NSK)	1	1	1	1	1	1		

E-19-20 LEFT CRANKCASE

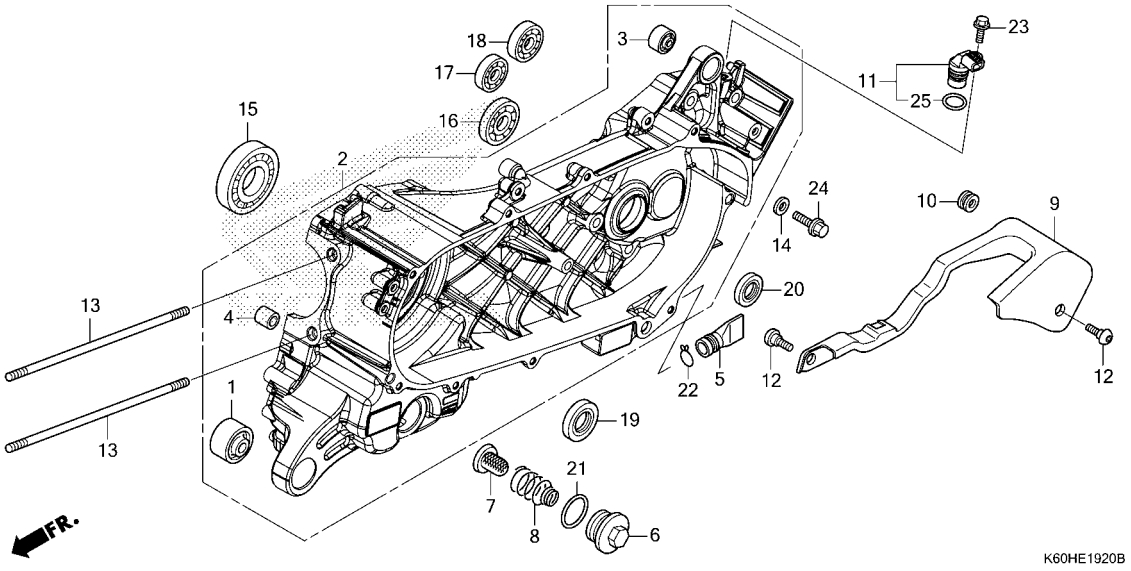

Ref. No.	Part No.	Description	Reqd. QTY ACB125CBF H	K	L	M	N	P	Serial No.	Parts catalogue code
16	91003-KZR-601	BEARING, RADIAL BALL, 6204 (NTN)	1	1	1	1	1	1		
	91003-KZR-602	BEARING, RADIAL BALL, 6204 (FUJIKOSHI)	1	1	1	1	1	1		
17	91005-KZR-601	BEARING, RADIAL BALL, 6301 (NTN)	1	1	1	1	1	1		
	91005-KZR-602	BEARING, RADIAL BALL, 6301 (FUJIKOSHI)	1	1	1	1	1	1		
18	91008-KZR-601	BEARING, RADIAL BALL, 6302 (NTN)	1	1	1	1	1	1		
	91008-KZR-602	BEARING, RADIAL BALL, 6302 (FUJIKOSHI)	1	1	1	1	1	1		
19	91202-KWN-901	OIL SEAL, 26X45X6	1	1	1	1	1	1		
20	91203-K35-J01	OIL SEAL, 20X32X6(ARAI)	1	1	1	1	1	1		
	91203-K50-T01	OIL SEAL, 20X32X6(NOK)	1	1	1	1	1	1		
21	91302-001-020	O-RING, 30.8MM	1	1	1	1	1	1		
22	95002-80000	CLIP, TUBE(C12)	1	1	1	1	1	1		
23	95701-06016-00	BOLT, FLANGE, 6X16	1	1	1	1	1	1		
24	95701-08016-00	BOLT, FLANGE, 8X16	1	1	1	1	1	1		
25	91303-MKH-D21	O-RING B	1	1	1	1	1	1		

CRANKSHAFT/PISTON

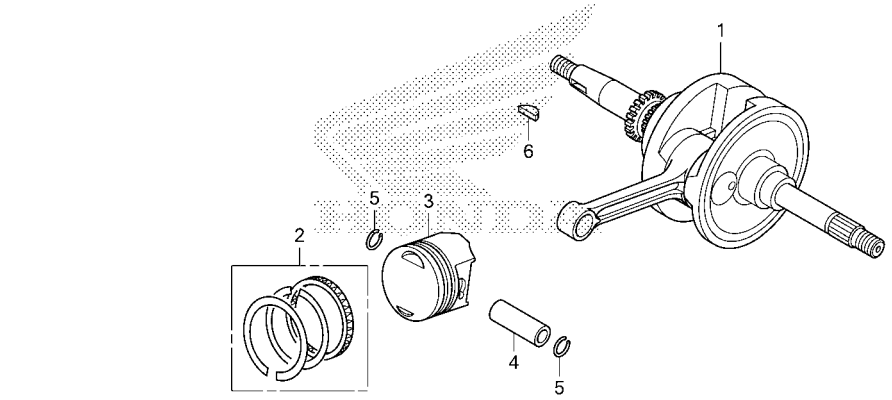

K60HE2000

Ref. No.	Part No.	Description	Reqd. QTY ACB125CBF H	K	L	M	N	P	Serial No.	Parts catalogue code
1	13000-K60-B00	CRANKSHAFT COMP.	1	-	-	-	-	-		
	13000-K60-B60		-	1	1	1	1	1		
2	13011-K60-B00	RING SET, PISTON(STD.)(TPR)	1	-	-	-	-	-		
	13021-KWN-900	RING SET, PISTON(0.25)(RIKEN)	(1)	-	-	-	-	-		
	13021-KZR-600	RING SET, PISTON(0.25)(TPR)	(1)	-	-	-	-	-		
	13031-KWN-900	RING SET, PISTON(0.50)(RIKEN)	(1)	-	-	-	-	-		
	13031-KZR-600	RING SET, PISTON(0.50)(TPR)	(1)	-	-	-	-	-		
	13041-KWN-900	RING SET, PISTON(0.75)(RIKEN)	(1)	-	-	-	-	-		
	13041-KZR-600	RING SET, PISTON(0.75)(TPR)	(1)	-	-	-	-	-		
	13051-KWN-900	RING SET, PISTON(1.00)(RIKEN)	(1)	-	-	-	-	-		
	13051-KZR-600	RING SET, PISTON(1.00)(TPR)	(1)	-	-	-	-	-		
	13011-K60-305	RING SET, PISTON(STD.)(TPR)	-	1	1	1	1	1		
	13011-K60-B60	RING SET, PISTON(STD.)(RIKEN)	-	1	1	1	1	1		
	13021-K60-305	RING SET, PISTON(0.25)(TPR)	-	(1)	(1)	(1)	(1)	(1)		
	13021-K60-B60	RING SET, PISTON(0.25)(RIKEN)	-	(1)	(1)	(1)	(1)	(1)		
	13031-K60-305	RING SET, PISTON(0.50)(TPR)	-	(1)	(1)	(1)	(1)	(1)		
	13031-K60-B60	RING SET, PISTON(0.50)(RIKEN)	-	(1)	(1)	(1)	(1)	(1)		
	13041-K60-305	RING SET, PISTON(0.75)(TPR)	-	(1)	(1)	(1)	(1)	(1)		
	13041-K60-B60	RING SET, PISTON(0.75)(RIKEN)	-	(1)	(1)	(1)	(1)	(1)		
	13051-K60-305	RING SET, PISTON(1.00)(TPR)	-	(1)	(1)	(1)	(1)	(1)		
	13051-K60-B60	RING SET, PISTON(1.00)(RIKEN)	-	(1)	(1)	(1)	(1)	(1)		
3	13101-KWN-902	PISTON(STD.)	1	1	1	1	1	1		
	13102-KWN-903	PISTON(O.S. 0.25)	(1)	-	-	-	-	-		
	13103-KWN-903	PISTON(O.S. 0.50)	(1)	-	-	-	-	-		
	13104-KWN-903	PISTON(O.S. 0.75)	(1)	-	-	-	-	-		
	13105-KWN-903	PISTON(O.S. 1.00)	(1)	-	-	-	-	-		
	13101-KWN-P00	PISTON(STD.)	-	1	1	1	1	1		
	13102-KWN-P00	PISTON(O.S. 0.25)	-	(1)	(1)	(1)	(1)	(1)		
	13103-KWN-P00	PISTON(O.S. 0.50)	-	(1)	(1)	(1)	(1)	(1)		

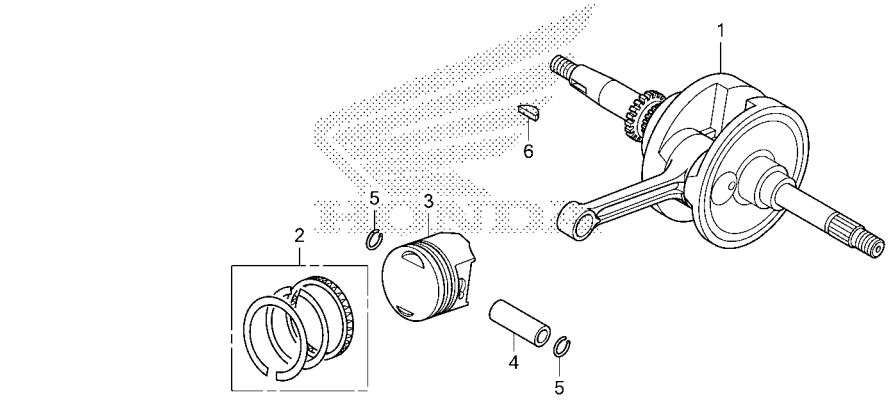

K60HE2000

Ref. No.	Part No.	Description	Reqd. QTY ACB125CBF H	K	L	M	N	P	Serial No.	Parts catalogue code
(3)	13104-KWN-P00	PISTON(O.S. 0.75)·····	-	(1)	(1)	(1)	(1)	(1)		
	13105-KWN-P00	PISTON(O.S. 1.00)·····	-	(1)	(1)	(1)	(1)	(1)		
4	13111-KWN-900	PIN, PISTON·····	1	1	1	1	1	1		
5	13115-GN5-910	CLIP, PISTON PIN, 13MM·····	2	2	2	2	2	2		
6	90741-003-010	KEY, WOODRUFF, 4MM·····	1	1	1	1	1	1		

E-22 THROTTLE BODY/FUEL INJECTOR

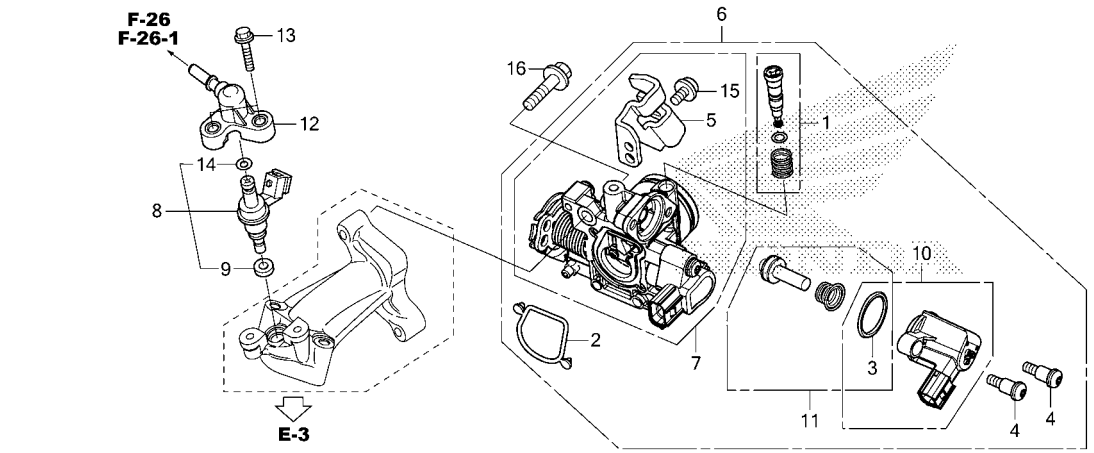

K60HE2200A

Ref. No.	Part No.	Description	Reqd. QTY ACB125CBF H	K	L	M	N	P	Serial No.	Parts catalogue code
1	16016-K03-H11	SCREW SET	1	1	1	1	1	1		
2	16075-KZR-601	O-RING, THROTTLE BODY	1	1	1	1	1	1		
3	16077-KVB-S51	O-RING, 1.9X20.4	1	1	1	1	1	1		
4	16081-KYJ-901	SCREW, TORX, 5X8.7	2	2	2	2	2	2		
5	16169-GGZ-J01	STAY, WIRE	1	1	1	1	1	1		
6	16400-K60-B01	THROTTLE BODY ASSY.(GQYRA A)	1	-	-	-	-	-		
	16400-K60-B61	THROTTLE BODY ASSY.(GQYKB A)	-	1	1	1	1	1		
7	16410-K60-B01	BODY SET	1	-	-	-	-	-		
	16410-K60-B61		-	1	1	1	1	1		
8	16450-KZR-B21	INJECTOR ASSY., FUEL	1	-	-	-	-	-		
	16450-K18-961		-	1	1	1	1	1		
9	16472-KPC-D50	RING, SEAL	1	1	1	1	1	1		
10	16480-KVB-S51	SOLENOID	1	1	1	1	1	1		
11	16485-GGZ-J01	SEAT SET	1	1	1	1	1	1		
12	17565-KZR-650	JOINT COMP., INJECTOR	1	1	1	1	1	1		
13	90004-GHB-660	BOLT, FLANGE, 6X22(NSHF)	2	2	2	2	2	2		
14	91301-GGL-J01	O-RING, 6.3X2.2	1	1	1	1	1	1		
15	93892-05012-18	SCREW-WASHER, 5X12	1	1	1	1	1	1		
16	96001-06025-00	BOLT, FLANGE, 6X25	2	2	2	2	2	2		

F-1 HEADLIGHT(ACB125CBFH)

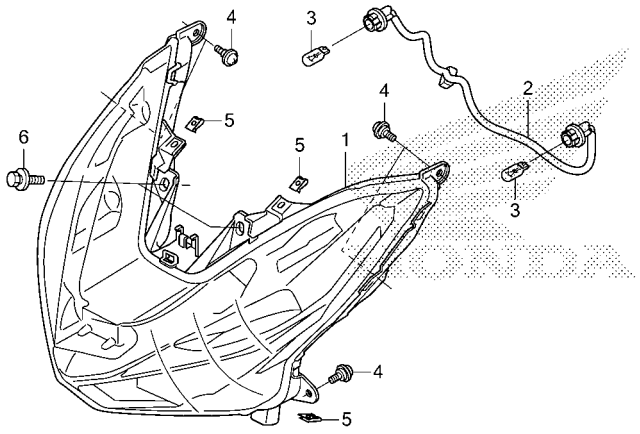

K60HF0100

Ref. No.	Part No.	Description	Reqd. QTY ACB125CBF H	K	L	M	N	P	Serial No.	Parts catalogue code
1	33110-K59-A11	HEADLIGHT UNIT	1	-	-	-	-	-		
2	33150-K59-A11	SOCKET ASSY., FR. WINKER	1	-	-	-	-	-		
3	34905-KAN-W01	BULB, WINKER(12V 10W)(AMBER) (STANLEY)	2	-	-	-	-	-		
4	90117-KVG-A20	SCREW, PAN, 5X13	6	-	-	-	-	-		
5	90677-KAN-T00	NUT, CLIP, 5MM	4	-	-	-	-	-		
6	93404-06016-00	BOLT-WASHER, 6X16	2	-	-	-	-	-		

F-1-1 HEADLIGHT(ACB125CBFK/L/M/N/P)

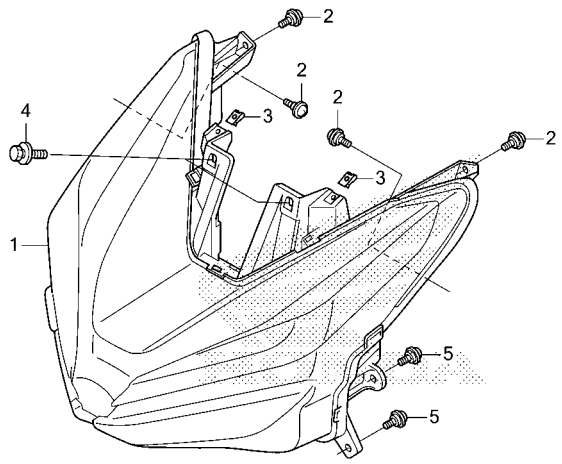

K60HF0101A

Ref. No.	Part No.	Description	Reqd. QTY ACB125CBF H	K	L	M	N	P	Serial No.	Parts catalogue code
1	33100-K59-A71	LIGHT ASSY., FR. COMBINATION	-	1	1	1	1	-		
	33100-K2V-N31		-	-	-	-	-	1		
2	90117-KVG-A20	SCREW, PAN, 5X13	-	4	4	4	4	-		
3	90677-KAN-T00	NUT, CLIP, 5MM	-	2	2	2	2	2		
4	93404-06016-00	BOLT-WASHER, 6X16	-	2	2	2	2	2		
5	90117-KVG-A20	SCREW, PAN, 5X13	-	4	4	4	4	4		

F-2 METER(ACB125CBFH)

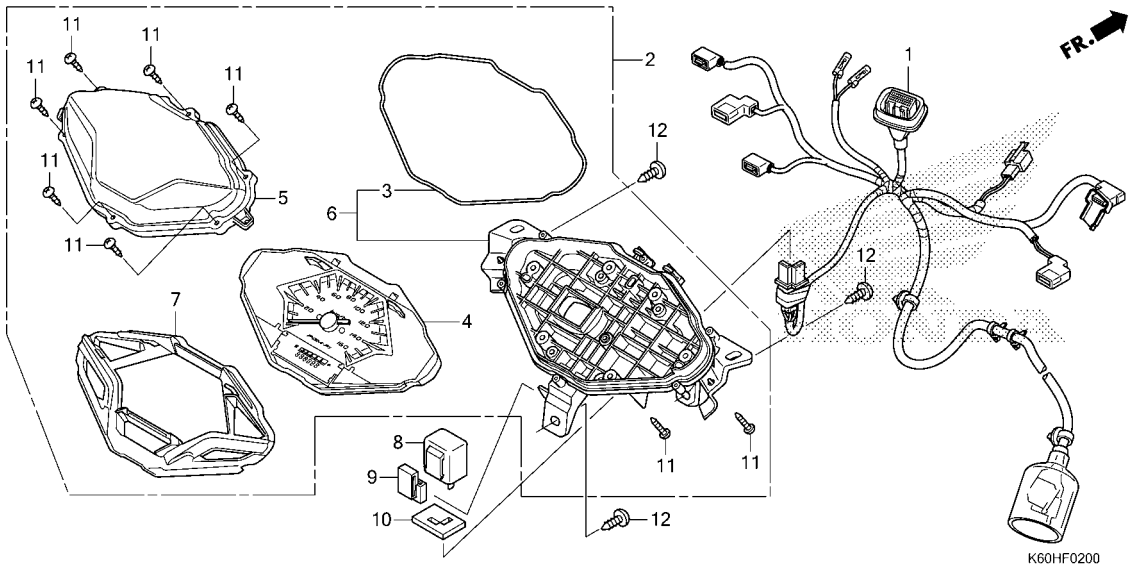

Ref. No.	Part No.	Description	Reqd. QTY ACB125CBF H	K	L	M	N	P	Serial No.	Parts catalogue code
1	32101-K60-B00	SUB HARNESS, SPEEDOMETER·····	1	-	-	-	-	-		
2	37100-K60-B01	METER ASSY., COMBINATION(KPH)	1	-	-	-	-	-		
3	37202-K59-A11	PACKING·····	1	-	-	-	-	-		
4	37210-K60-B01	METER COMP.(KPH)·····	1	-	-	-	-	-		
5	37211-K59-A11	LENS·····	1	-	-	-	-	-		
6	37212-K59-A11	CASE ASSY.·····	1	-	-	-	-	-		
7	37230-K60-B11	REFLECTOR ASSY.·····	1	-	-	-	-	-		
8	38301-KPH-881	RELAY COMP., WINKER(MITSUBA)·	1	-	-	-	-	-		
	38301-KZR-C01	RELAY COMP., WINKER(DENSO)···	1	-	-	-	-	-		
9	38306-K46-N01	SUSPENSION, WINKER RELAY····· (DENSO)	1	-	-	-	-	-		
	38306-KJ6-740	····· (MITSUBA)	1	-	-	-	-	-		
10	38307-GJ1-014	COVER, SEAL(MITSUBA)·····	1	-	-	-	-	-		
	38307-K16-901	COVER, SEAL(DENSO)·····	1	-	-	-	-	-		
11	90314-KVS-F22	SCREW, TAPPING, 3X14·····	13	-	-	-	-	-		
12	93903-25310	SCREW, TAPPING, 5X16·····	3	-	-	-	-	-		

F-2-1 METER(ACB125CBFK/L/M/N/P)

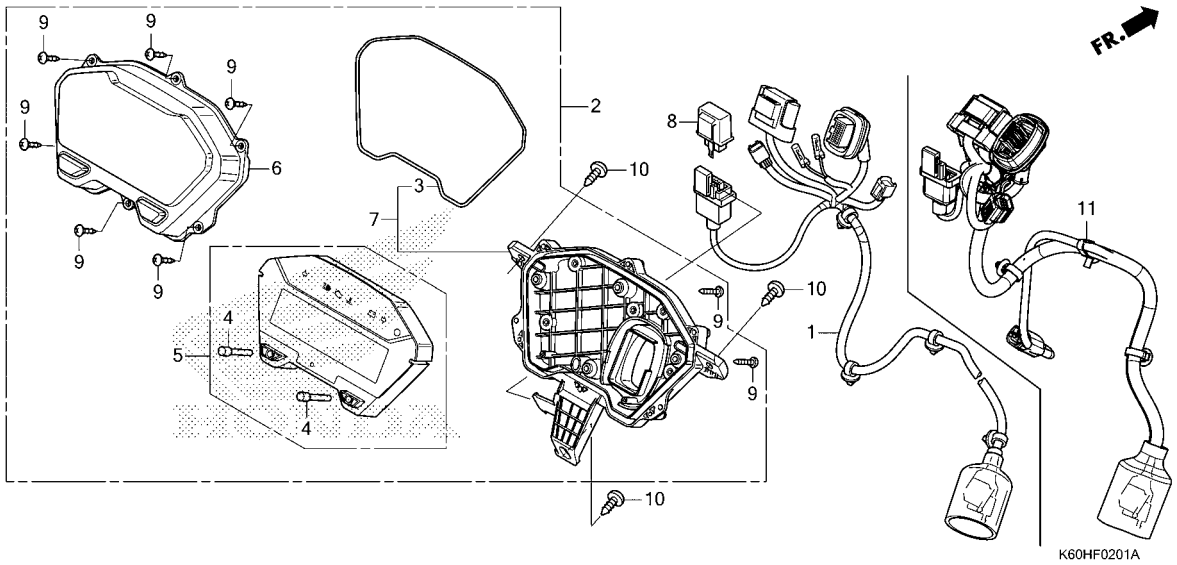

Ref. No.	Part No.	Description	Reqd. QTY ACB125CBF H	K	L	M	N	P	Serial No.	Parts catalogue code
1	32101-K60-B70	SUB HARNESS, SPEEDOMETER·····	-	1	1	1	1	-		
2	37100-K60-B71	METER ASSY., COMBINATION(KPH)	-	1	1	-	-	-		
	37100-K60-B72	·····	-	-	-	1	-	-		
	37100-K60-B73	·····	-	-	-	-	1	1		
3	37202-K59-A71	PACKING·····	-	1	1	1	1	1		
4	37203-K59-A71	ROD, TRIP·····	-	2	2	2	2	2		
5	37210-K60-B71	METER COMP.(KPH)·····	-	1	1	1	-	-		
	37210-K60-B72	·····	-	-	-	-	1	1		
6	37211-K59-A71	LENS ASSY.·····	-	1	1	-	-	-		
	37213-K59-A71	·····	-	-	-	1	1	1		
7	37212-K60-B71	CASE ASSY.·····	-	1	1	1	1	1		
8	38301-K59-A71	RELAY COMP., WINKER(LED)·····	-	1	1	1	1	1		
9	90314-KVS-F22	SCREW, TAPPING, 3X14·····	-	10	10	10	10	10		
10	93903-25310	SCREW, TAPPING, 5X16·····	-	3	3	3	3	3		
11	32101-K2V-N30	SUB HARNESS, SPEEDOMETER·····	-	-	-	-	-	1		

F-3 MIRROR

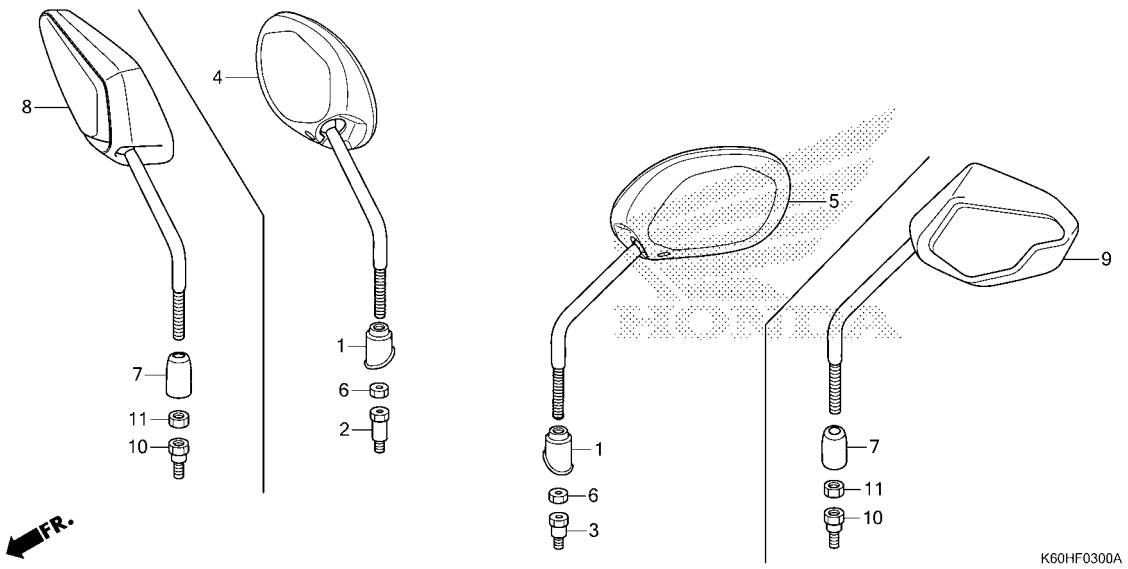

Ref. No.	Part No.	Description	Reqd. QTY ACB125CBF H	K	L	M	N	P	Serial No.	Parts catalogue code
1	88114-KVB-900	CAP, LOCK NUT	2	-	-	-	-	-		
2	88115-KZR-600	BOLT, ADAPTER, 10MM	1	-	-	-	-	-		
3	88116-KZR-600	BOLT, ADAPTER, 10MM	1	-	-	-	-	-		
4	88210-KZR-600	MIRROR COMP., R.	1	-	-	-	-	-		
5	88220-KZR-600	MIRROR COMP., L.	1	-	-	-	-	-		
6	90301-KZR-600	NUT, HEX., 10MM (LEFT HAND THREAD)	2	-	-	-	-	-		
7	88115-KWN-980	CAP, LOCK NUT	-	2	2	2	2	2		
8	88210-K59-A70	MIRROR COMP., R.	-	1	1	1	1	1		
9	88220-K59-A70	MIRROR COMP., L.	-	1	1	1	1	1		
10	90003-MY5-720	BOLT, ADAPTER, 10MM	-	2	2	2	2	2		
11	90201-MW3-620	NUT, HEX., 10MM (LEFT HAND THREAD)	-	2	2	2	2	2		

F-4-10 HANDLE LEVER/SWITCH/CABLE(ACB125CBFH)

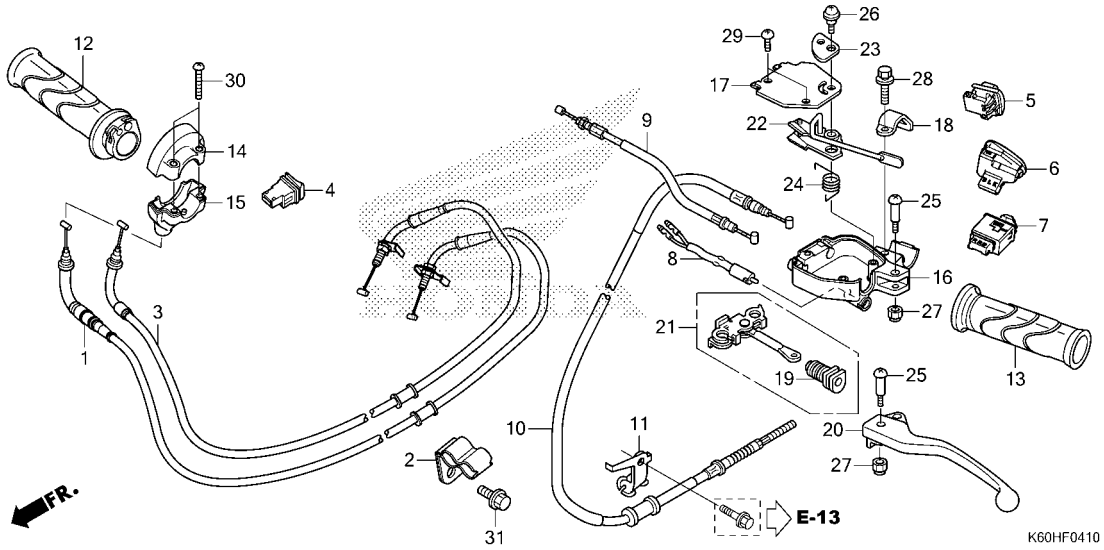

Ref. No.	Part No.	Description	Reqd. QTY ACB125CBF H	K	L	M	N	P	Serial No.	Parts catalogue code
1	17910-K59-A11	CABLE COMP. A, THROTTLE (YAMATO)	1	-	-	-	-	-		
	17910-K59-A12	CABLE COMP. A, THROTTLE (HI-LEX)	1	-	-	-	-	-		
2	17913-K59-A10	CLAMPER, THROTTLE CABLE	1	-	-	-	-	-		
3	17920-K59-A11	CABLE COMP. B, THROTTLE (YAMATO)	1	-	-	-	-	-		
	17920-K59-A12	CABLE COMP. B, THROTTLE (HI-LEX)	1	-	-	-	-	-		
4	35160-K27-V01	SWITCH UNIT, STARTER(ASAHI)	1	-	-	-	-	-		
5	35170-K60-B01	SWITCH UNIT, DIMMER(ASAHI)	1	-	-	-	-	-		
6	35180-K47-N01	SWITCH UNIT, HORN(ASAHI)	1	-	-	-	-	-		
7	35200-K47-N01	SWITCH UNIT, WINKER(ASAHI)	1	-	-	-	-	-		
8	35340-KPH-901	SWITCH ASSY., FR. STOP	1	-	-	-	-	-		
9	43440-K60-B01	CABLE COMP., FR. BRAKE CONNECTING	1	-	-	-	-	-		
10	43450-K60-B01	CABLE COMP., RR. BRAKE	1	-	-	-	-	-		
11	43455-KWN-900	CLAMPER B, RR. BRAKE CABLE	1	-	-	-	-	-		
12	53140-K44-V00	GRIP COMP., THROTTLE	1	-	-	-	-	-		
13	53166-KWB-600	GRIP, L. HANDLE	1	-	-	-	-	-		
14	53167-K66-V00	HOUSING, UPPER THROTTLE	1	-	-	-	-	-		
15	53168-K66-V00	HOUSING, UNDER THROTTLE	1	-	-	-	-	-		
16	53172-K25-910	BRACKET, L. BRAKE LEVER	1	-	-	-	-	-		
17	53173-GFM-900	COVER, L. BRAKE LEVER BRACKET	1	-	-	-	-	-		
18	53173-KVB-920	BAND, HANDLE BRACKET	1	-	-	-	-	-		
19	53176-GBL-870	BOOT, BRAKE LEVER ROD	1	-	-	-	-	-		

F-4-10 HANDLE LEVER/SWITCH/CABLE(ACB125CBFH)

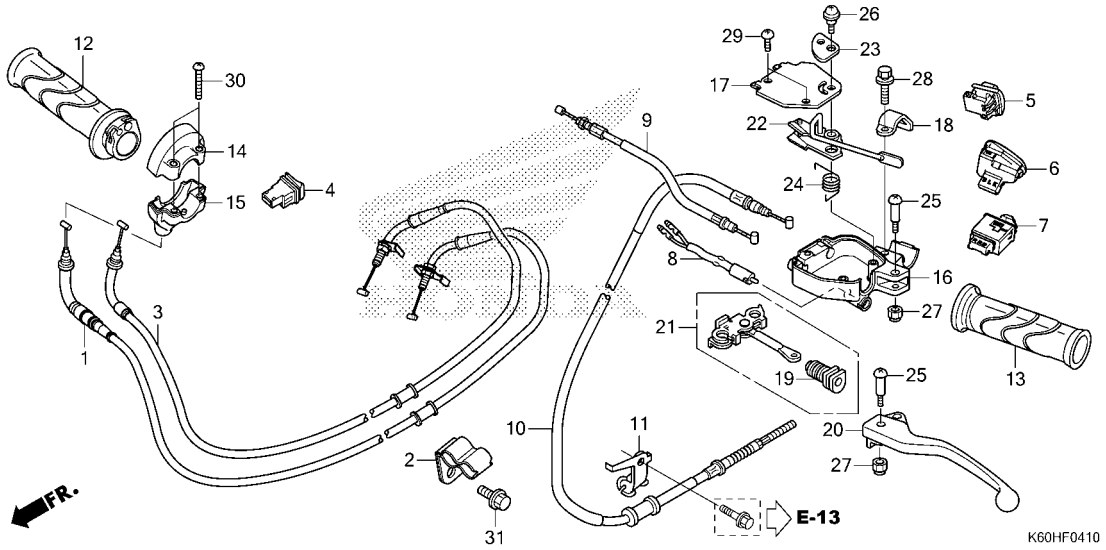

Ref. No.	Part No.	Description	Reqd. QTY ACB125CBF H	K	L	M	N	P	Serial No.	Parts catalogue code
20	53178-K59-A10	LEVER, L. STEERING HANDLE····	1	-	-	-	-	-		
21	53180-K25-600	EQUALIZER ASSY.·····	1	-	-	-	-	-		
22	53185-K25-910	ARM COMP., RR. BRAKE LOCK····	1	-	-	-	-	-		
23	53186-GBL-870	COVER, RR. BRAKE LOCK LEVER··	1	-	-	-	-	-		
24	53188-KVB-920	SPRING, BRAKE LOCK ARM RETURN	1	-	-	-	-	-		
25	90115-KWN-900	SCREW, HANDLE LEVER PIVOT····	2	-	-	-	-	-		
26	90118-GFM-900	SCREW, PAN, 5X13·····	1	-	-	-	-	-		
27	90302-KVB-T01	NUT, U, 5MM·····	2	-	-	-	-	-		
28	93401-06020-00	BOLT-WASHER, 6X20·····	1	-	-	-	-	-		
29	93500-05012-1H	SCREW, PAN, 5X12·····	2	-	-	-	-	-		
30	93500-05020-0A	SCREW, PAN, 5X20·····	2	-	-	-	-	-		
31	95701-06012-00	BOLT, FLANGE, 6X12·····	1	-	-	-	-	-		

F-4-11 HANDLE LEVER/SWITCH/CABLE(ACB125CBFK/L/M/N/P)

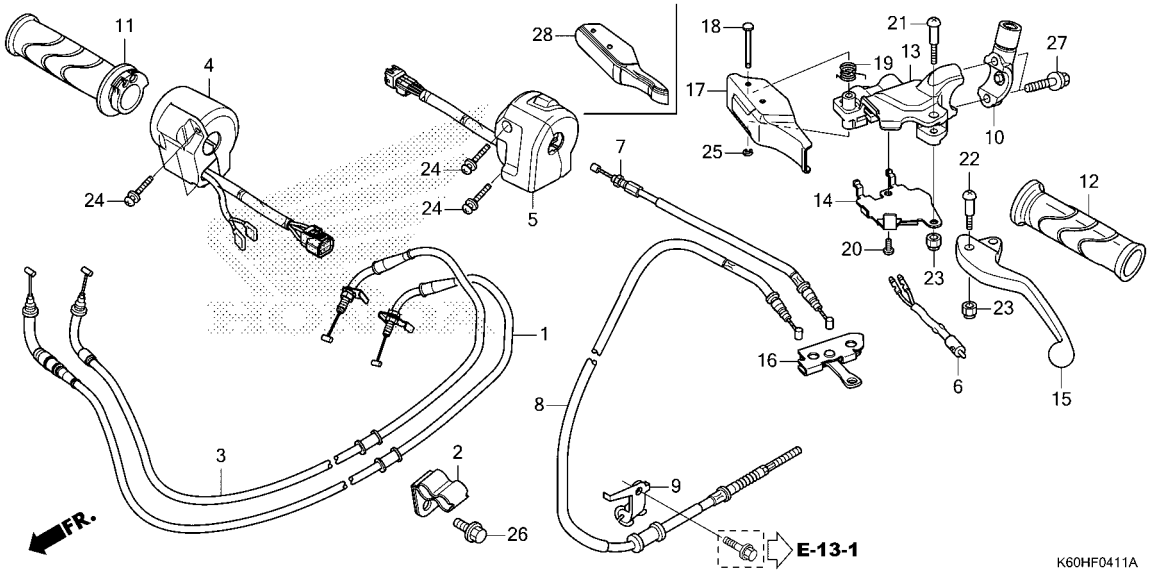

Ref. No.	Part No.	Description	Reqd. QTY ACB125CBF H	K	L	M	N	P	Serial No.	Parts catalogue code
1	17910-K59-A71	CABLE COMP. A, THROTTLE (YAMATO)	-	1	1	1	1	1		
	17910-K59-A72	CABLE COMP. A, THROTTLE (HI-LEX)	-	1	1	1	1	1		
2	17913-K59-A10	CLAMPER, THROTTLE CABLE	-	1	1	1	1	1		
3	17920-K59-A71	CABLE COMP. B, THROTTLE (YAMATO)	-	1	1	1	1	1		
	17920-K59-A72	CABLE COMP. B, THROTTLE (HI-LEX)	-	1	1	1	1	1		
4	35130-K60-B71	SWITCH ASSY., START	-	1	-	-	-	-		
	35130-K60-B72		-	-	1	1	1	1		
5	35200-K59-A71	SWITCH ASSY., DIMMER & HORN & WINKER	-	1	1	1	1	1		
6	35340-K27-V01	SWITCH ASSY., FR. STOP	-	1	1	1	1	1		
7	43440-K60-B61	CABLE COMP., FR. BRAKE CONNECTING	-	1	1	1	1	1		
8	43450-K60-B61	CABLE COMP., RR. BRAKE	-	1	1	1	1	1		
9	43455-KWN-900	CLAMPER B, RR. BRAKE CABLE	-	1	1	1	1	1		
10	45517-K81-N30	HOLDER, MIRROR	-	1	1	1	1	1		
11	53140-K59-A70	GRIP COMP., THROTTLE	-	1	1	1	1	1		
12	53166-KWB-600	GRIP, L. HANDLE	-	1	1	1	1	1		
13	53172-K59-A70	BRACKET, L. BRAKE LEVER	-	1	1	1	1	-		
	53172-K2S-N00		-	-	-	-	-	1		
14	53173-K81-N30	COVER, L. BRAKE LEVER BRACKET	-	1	1	1	1	-		
	53173-K0J-N00		-	-	-	-	-	1		
15	53178-K81-N30	LEVER, L. STEERING HANDLE	-	1	1	1	1	-		
	53178-K2S-N00		-	-	-	-	-	1		

F-4-11 HANDLE LEVER/SWITCH/CABLE(ACB125CBFK/L/M/N/P)

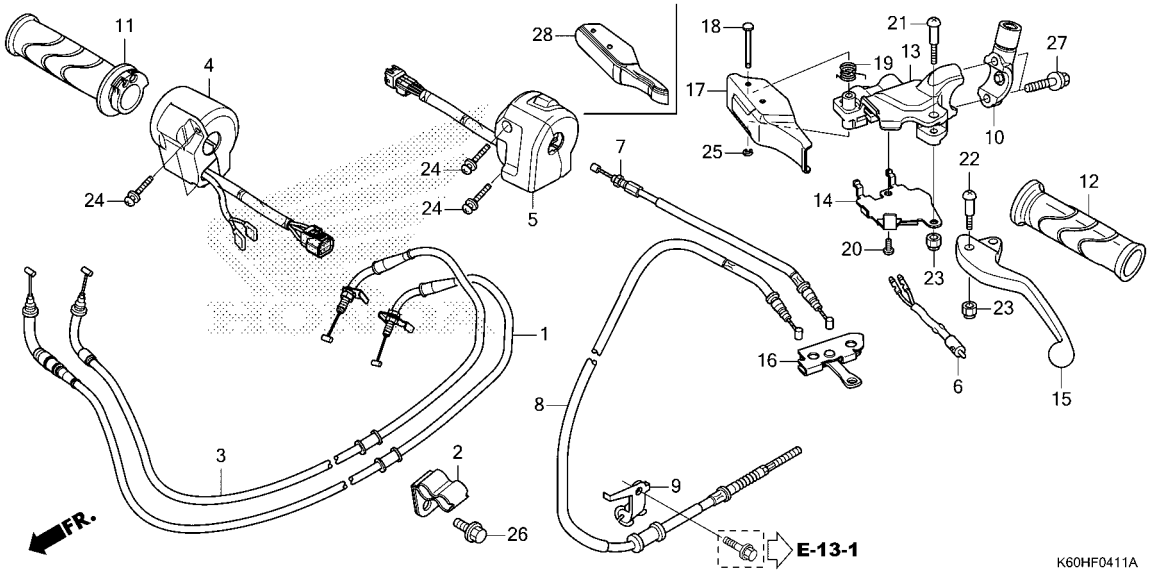

Ref. No.	Part No.	Description	Reqd. QTY ACB125CBF H	K	L	M	N	P	Serial No.	Parts catalogue code
16	53184-K59-A70	EQUALIZER COMP.	-	1	1	1	1	1		
17	53185-K81-N30	LEVER COMP., BRAKE LOCK	-	1	1	1	1	-		
18	53186-K81-N30	PIN, BRAKE LOCK LEVER	-	1	1	1	1	1		
19	53188-K81-N30	SPRING, BRAKE LOCK ARM RETURN	-	1	1	1	1	1		
20	90104-K81-N30	SCREW, PAN, 5X8	-	1	1	1	1	1		
21	90115-K81-N30	SCREW, HANDLE LEVER PIVOT	-	1	1	1	1	-		
	90115-K1A-N00		-	-	-	-	-	1		
22	90116-K81-N30	SCREW, HANDLE LEVER PIVOT	-	1	1	1	1	-		
	90115-KWN-900		-	-	-	-	-	1		
23	90302-KVB-T01	NUT, U, 5MM	-	2	2	2	2	2		
24	93892-05020-07	SCREW-WASHER, 5X20	-	4	4	4	4	4		
25	94540-03010	E-RING, 3MM	-	1	1	1	1	1		
26	95701-06012-00	BOLT, FLANGE, 6X12	-	1	1	1	1	1		
27	96001-06022-07	BOLT, FLANGE, 6X22	-	2	2	2	2	2		
28	53185-K1A-N00	LEVER COMP., BRAKE LOCK	-	-	-	-	-	1		

F-5-10 FRONT BRAKE MASTER CYLINDER(ACB125CBFH)

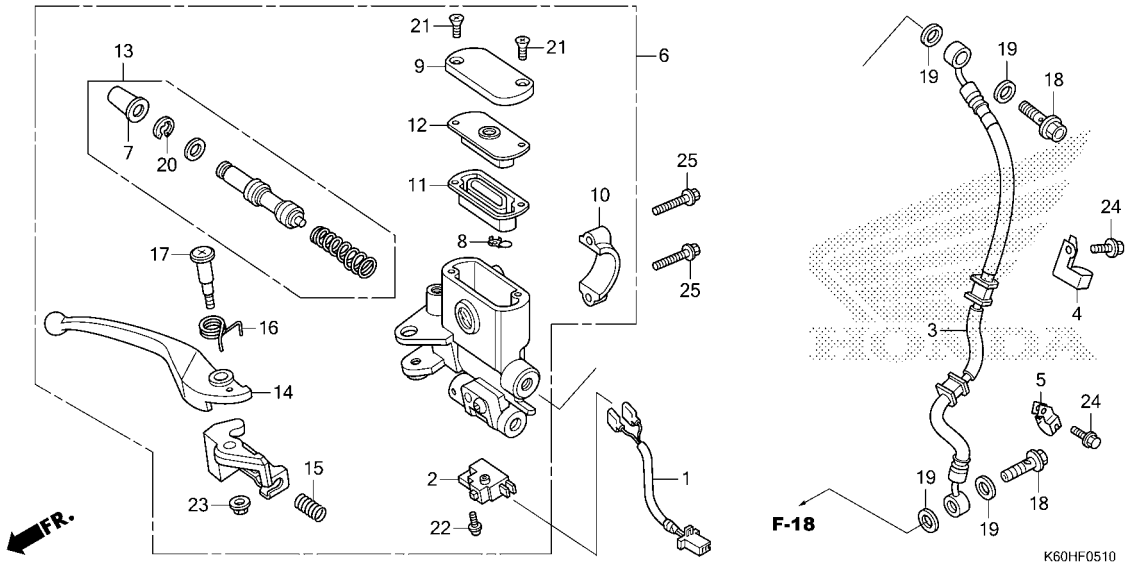

Ref. No.	Part No.	Description	Reqd. QTY ACB125CBF H	K	L	M	N	P	Serial No.	Parts catalogue code
1	32101-KVB-N60	SUB CORD, FR. STOP SWITCH····	1	-	-	-	-	-		
2	35340-KWB-601	SWITCH ASSY., FR. STOP·····	1	-	-	-	-	-		
3	45126-K59-A11	HOSE COMP., FR. BRAKE·····	1	-	-	-	-	-		
4	45156-KZL-940	CLAMPER A, BRAKE HOSE·····	1	-	-	-	-	-		
5	45157-KZL-940	CLAMPER B, BRAKE HOSE·····	1	-	-	-	-	-		
6	45500-KZR-711	CYLINDER ASSY., FR. BRAKE MASTER	1	-	-	-	-	-		
7	45504-410-003	BOOT COMP.·····	1	-	-	-	-	-		
8	45512-MA6-006	PROTECTOR·····	1	-	-	-	-	-		
9	45513-GW0-911	CAP, MASTER CYLINDER·····	1	-	-	-	-	-		
10	45517-GW0-751	HOLDER, MASTER CYLINDER·····	1	-	-	-	-	-		
11	45520-GW0-911	DIAPHRAGM·····	1	-	-	-	-	-		
12	45521-GW0-911	PLATE, DIAPHRAGM·····	1	-	-	-	-	-		
13	45530-KVY-911	CYLINDER SET, MASTER(NISSIN)·	1	-	-	-	-	-		
14	53175-KVG-A21	LEVER, R. STEERING HANDLE····	1	-	-	-	-	-		
15	53198-GBL-870	SPRING, RETURN·····	1	-	-	-	-	-		
16	53199-KVG-910	SPRING, BRAKE LEVER RETURN···	1	-	-	-	-	-		
17	90114-KVG-911	BOLT, HANDLE LEVER·····	1	-	-	-	-	-		
18	90145-KPH-B30	BOLT, OIL, 10X22(NISSIN)·····	2	-	-	-	-	-		
19	90545-300-000	WASHER, OIL BOLT·····	4	-	-	-	-	-		
20	90651-MA5-671	CIRCLIP·····	1	-	-	-	-	-		
21	93600-04012-1G	SCREW, FLAT, 4X12·····	2	-	-	-	-	-		
22	93893-04012-17	SCREW-WASHER, 4X12·····	1	-	-	-	-	-		
23	94050-06000	NUT, FLANGE, 6MM·····	1	-	-	-	-	-		
24	95701-06012-00	BOLT, FLANGE, 6X12·····	2	-	-	-	-	-		
25	95701-06022-00	BOLT, FLANGE, 6X22·····	2	-	-	-	-	-		

F-5-11 FRONT BRAKE MASTER CYLINDER(ACB125CBFK/L/M/N/P)

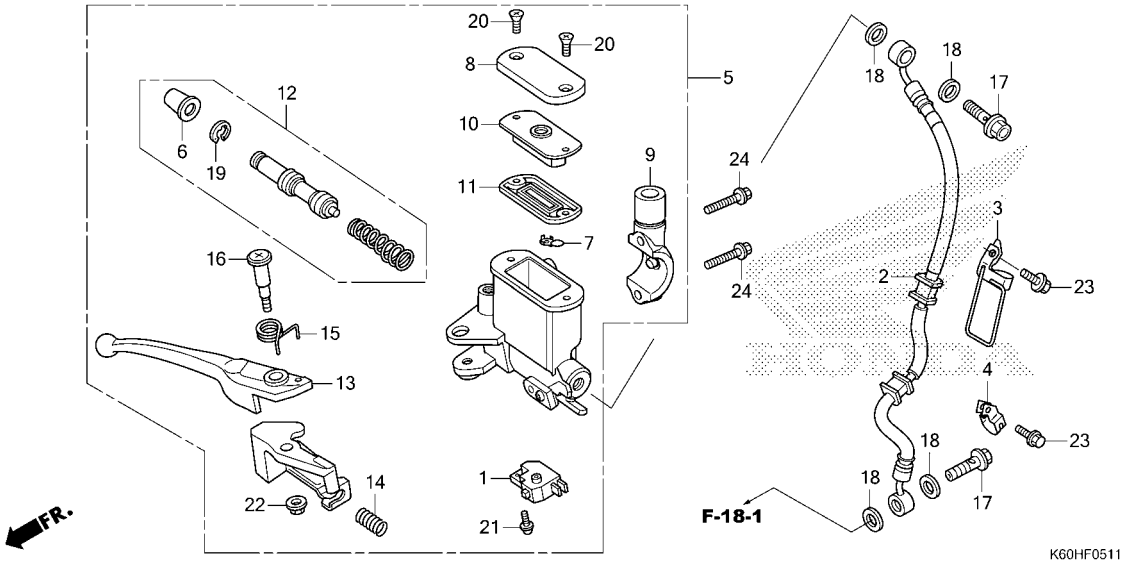

Ref. No.	Part No.	Description	Reqd. QTY ACB125CBF H	K	L	M	N	P	Serial No.	Parts catalogue code
1	35340-MGS-D31	SWITCH ASSY., FR. STOP	-	1	1	1	1	1		
2	45126-K59-A71	HOSE COMP., FR. BRAKE	-	1	1	1	1	-		
	45126-K2V-N31		-	-	-	-	-	1		
3	45156-K59-A70	CLAMPER A, BRAKE HOSE	-	1	1	1	1	-		
	45156-K2V-N30	CLAMPER COMP. A, BRAKE HOSE	-	-	-	-	-	1		
4	45157-KZL-940	CLAMPER B, BRAKE HOSE	-	1	1	1	1	-		
	45157-K2V-N30		-	-	-	-	-	1		
5	45500-K59-A71	CYLINDER ASSY., FR. MASTER	-	1	1	1	1	-		
	45500-K2S-N01		-	-	-	-	-	1		
6	45504-K59-A71	BOOT COMP.	-	1	1	1	1	1		
7	45512-K59-A71	PROTECTOR	-	1	1	1	1	1		
8	45513-K59-A71	CAP, MASTER CYLINDER	-	1	1	1	1	1		
9	45517-K81-N30	HOLDER, MIRROR	-	1	1	1	1	1		
10	45518-K59-A71	PLATE, DIAPHRAGM	-	1	1	1	1	1		
11	45520-K59-A71	DIAPHRAGM	-	1	1	1	1	1		
12	45530-K59-A71	CYLINDER SET, MASTER	-	1	1	1	1	1		
13	53175-K59-A71	LEVER, R. STEERING HANDLE	-	1	1	1	1	1		
14	53198-K59-A71	SPRING, DELAY	-	1	1	1	1	1		
15	53199-K59-A71	SPRING, LEVER	-	1	1	1	1	1		
16	90114-K59-A71	BOLT, LEVER	-	1	1	1	1	1		
17	90145-GAZ-981	BOLT, OIL, 10X22	-	2	2	2	2	2		
	90145-KPH-B30	BOLT, OIL, 10X22(NISSIN)	-	2	2	2	2	2		
18	90545-300-000	WASHER, OIL BOLT	-	4	4	4	4	4		
19	90651-K59-A71	RING, STOP	-	1	1	1	1	1		
20	93600-04016-1G	SCREW, FLAT, 4X16	-	2	2	2	2	2		

F-5-11 FRONT BRAKE MASTER CYLINDER(ACB125CBFK/L/M/N/P)

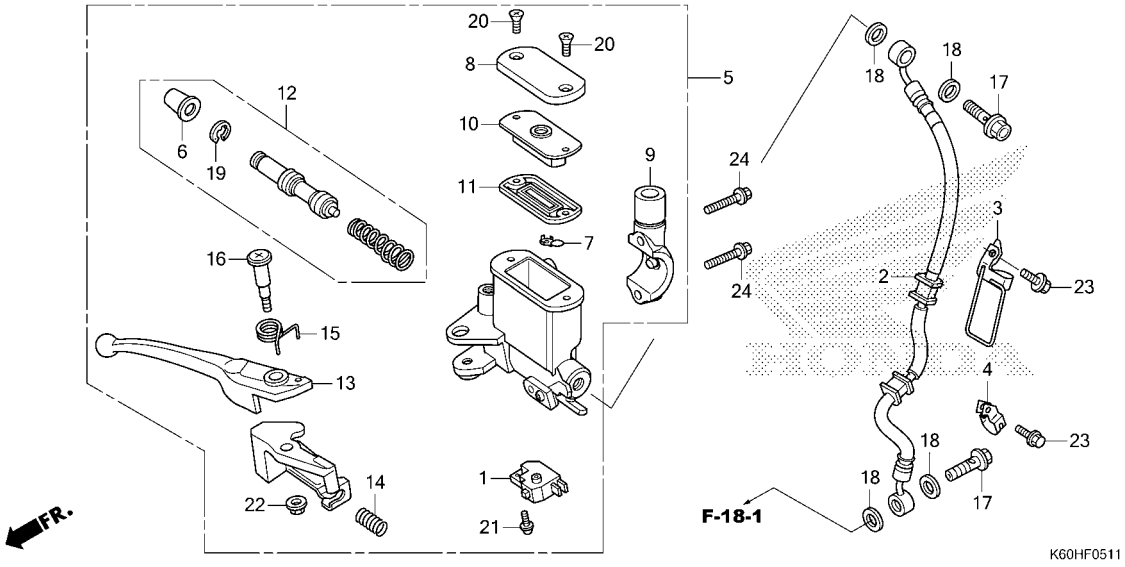

Ref. No.	Part No.	Description	Reqd. QTY ACB125CBF H	K	L	M	N	P	Serial No.	Parts catalogue code
21	93893-04012-17	SCREW-WASHER, 4X12	-	1	1	1	1	1		
22	94050-06070	NUT, FLANGE, 6MM	-	1	1	1	1	1		
	94050-06000		-	1	-	-	-	-		
23	95701-06012-00	BOLT, FLANGE, 6X12	-	2	2	2	2	2		
24	96001-06022-07	BOLT, FLANGE, 6X22	-	2	2	2	2	2		

3

F-9 HANDLE PIPE/HANDLE COVER(ACB125CBFH)

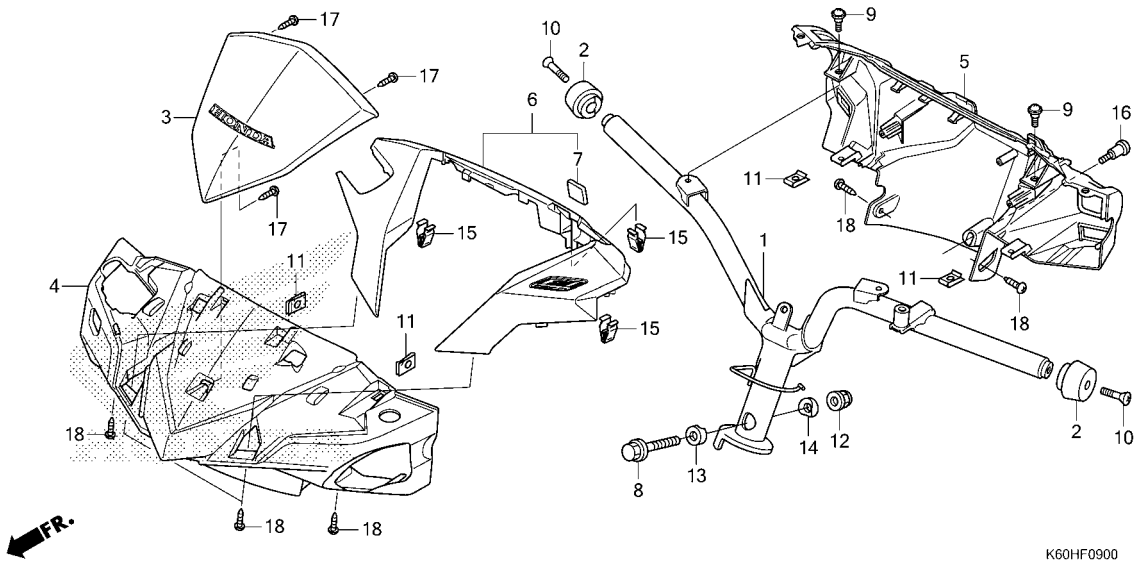

Ref. No.	Part No.	Description	Reqd. QTY ACB125CBF H	K	L	M	N	P	Serial No.	Parts catalogue code
1	53100-K59-A10	PIPE COMP., STEERING HANDLE (CBS)	1	-	-	-	-	-		
2	53102-KVB-S00	WEIGHT A, HANDLE	2	-	-	-	-	-		
3	53201-K59-A10ZA	COVER SET, HANDLE TOP(WL) *NH1*.....BLACK	1	-	-	-	-	-		
4	53205-K59-A10ZB	COVER, HANDLE FR. *TBLACK*.....BLACK	1	-	-	-	-	-		
5	53206-K60-B00ZB	COVER, HANDLE RR. *TBLACK*.....BLACK	1	-	-	-	-	-		
6	53280-K60-B00ZD	COVER SET, SPEEDOMETER(WL) *NH1*.....BLACK	1	-	-	-	-	-		
7	86150-KPG-901	EMBLEM, PRODUCT(MARUI)	1	-	-	-	-	-		
	86150-KPG-902	EMBLEM, PRODUCT(UEHARA)	1	-	-	-	-	-		
	86150-KTJ-C60	EMBLEM, PRODUCT(SHINKO)	1	-	-	-	-	-		
8	90102-KZL-930	BOLT, FLANGE, 10X48	1	-	-	-	-	-		
9	90105-MG9-000	SCREW, PAN, 5X17	2	-	-	-	-	-		
10	90191-KWB-600	SCREW, OVAL, 6X45	2	-	-	-	-	-		
11	90302-KWW-A00	NUT, SPRING, 4MM	4	-	-	-	-	-		
12	90304-KGH-901	NUT, U, 10MM(FUJI SEIMITSU)	1	-	-	-	-	-		
13	90501-KPH-880	COLLAR A, HANDLE SETTING	1	-	-	-	-	-		
14	90505-KPH-880	COLLAR B, HANDLE SETTING	1	-	-	-	-	-		
15	90666-K59-A11	CLIP, SNAP FITTING(PO)	3	-	-	-	-	-		
	90666-SDA-A01	CLIP, SNAP FITTING(PO) (NATURAL)	3	-	-	-	-	-		
16	91422-KVB-900	SCREW, SPECIAL PAN, 5MM	1	-	-	-	-	-		
17	93903-24310	SCREW, TAPPING, 4X12	3	-	-	-	-	-		
18	93903-24380	SCREW, TAPPING, 4X12	6	-	-	-	-	-		

F-9-1 HANDLE PIPE/HANDLE COVER(ACB125CBFK/L/M/N/P)

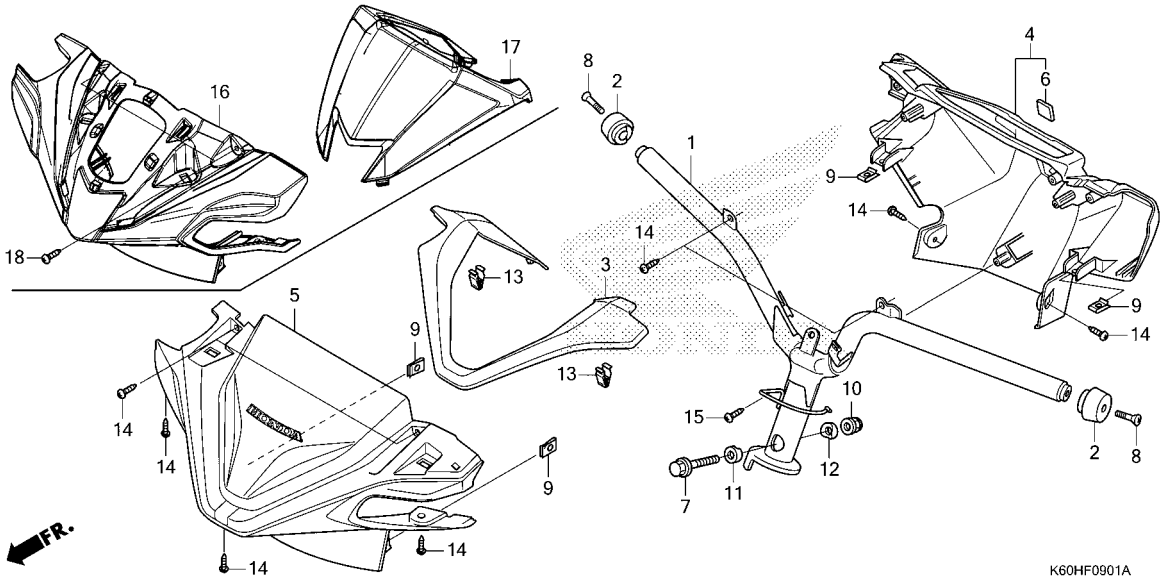

Ref. No.	Part No.	Description	Reqd. QTY ACB125CBF H	K	L	M	N	P	Serial No.	Parts catalogue code
1	53100-K59-A70	PIPE COMP., STEERING HANDLE··	-	1	1	1	1	1		
2	53102-K59-A70	WEIGHT A, HANDLE·····	-	2	2	2	2	2		
3	53208-K59-A70ZR	COVER, HANDLE FR. TOP *YR271*.....NITRIC ORANGE	-	1	1	1	1	-		
	53208-K59-A70ZT	*B210M*...VIVID BLUE METALLIC	-	1	1	1	1	-		
	53208-K59-A70ZS	*RP195M* SPACE MAGENTA METALLIC	-	1	-	-	-	-		
	53208-K59-A70ZU	*NH229MU* ANCHOR GRAY METALLIC-U	-	1	-	-	-	-		
	53208-K59-A70YB	*R383*.....VALIANT RED	-	-	1	1	1	-		
	53208-K59-A70ZC	*NH436M* MAT GUNPOWDER BLACK METALLIC	-	-	1	1	1	-		
	53208-K59-A70YJ	*NHC51P* MAT PEARL CRATER WHITE	-	-	-	-	1	-		
4	53280-K59-A70ZB	COVER COMP., HANDLE RR. *TBLACK*.....BLACK	-	1	1	1	1	-		
	53280-K2V-N30ZA	*TBLACK*.....BLACK	-	-	-	-	-	1		
5	53290-K59-A70ZA	COVER SET, HANDLE FR.(WL) *NH1*.....BLACK	-	1	1	1	1	-		
6	86150-KPG-901	EMBLEM, PRODUCT(MARUI)·····	-	1	1	1	1	-		
	86150-KPG-902	EMBLEM, PRODUCT(UEHARA)·····	-	1	1	1	1	-		
	86150-KTJ-C60	EMBLEM, PRODUCT(SHINKO)·····	-	1	1	1	1	-		
	86150-GFC-890	EMBLEM, PRODUCT·····	-	-	-	-	-	1		
	86150-GFC-901	EMBLEM, PRODUCT(MARUI)·····	-	-	-	-	-	1		
	86150-GFC-902	EMBLEM, PRODUCT(UEHARA)·····	-	-	-	-	-	1		
	86150-KYS-940	EMBLEM, PRODUCT(SHINKO ASIA)·	-	-	-	-	-	1		
7	90102-KZL-930	BOLT, FLANGE, 10X48·····	-	1	1	1	1	1		
8	90191-KWB-600	SCREW, OVAL, 6X45·····	-	2	2	2	2	2		

F-9-1 HANDLE PIPE/HANDLE COVER(ACB125CBFK/L/M/N/P)

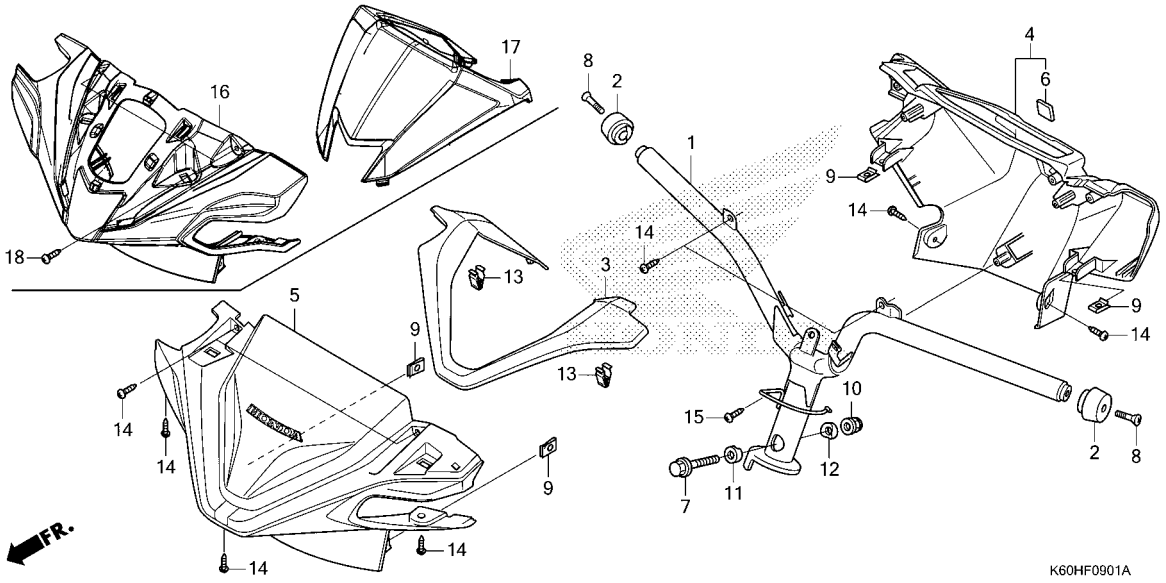

Ref. No.	Part No.	Description	Reqd. QTY ACB125CBF H	K	L	M	N	P	Serial No.	Parts catalogue code
9	90302-KWW-A00	NUT, SPRING, 4MM·····	-	4	4	4	4	4		
10	90304-KGH-901	NUT, U, 10MM(FUJI SEIMITSU)··	-	1	1	1	1	1		
11	90501-KPH-880	COLLAR A, HANDLE SETTING·····	-	1	1	1	1	1		
12	90505-KPH-880	COLLAR B, HANDLE SETTING·····	-	1	1	1	1	1		
13	90666-K59-A11	CLIP, SNAP FITTING(PO)·····	-	2	2	2	2	2		
	90666-SDA-A01	CLIP, SNAP FITTING(PO) (NATURAL)	-	2	2	2	2	2		
14	93903-24380	SCREW, TAPPING, 4X12·····	-	9	9	9	9	6		
15	93903-35380	SCREW, TAPPING, 5X16·····	-	1	1	1	1	1		
16	53205-K2V-N30ZA	COVER, HANDLE FR. *NH1*.....BLACK	-	-	-	-	-	1		
17	53290-K2V-H20ZA	COVER SET, HANDLE TOP(WL) *TYPE5*.....	-	-	-	-	-	1		
	53290-K2V-H20ZB	*TYPE4*.....	-	-	-	-	-	1		
	53290-K2V-H20ZC	*TYPE3*.....	-	-	-	-	-	1		
	53290-K2V-H20ZD	*TYPE2*.....	-	-	-	-	-	1		
	53290-K2V-H20ZE	*TYPE1*.....	-	-	-	-	-	1		
18	93903-24480	SCREW, TAPPING, 4X16·····	-	-	-	-	-	2		

F-10 STEERING STEM

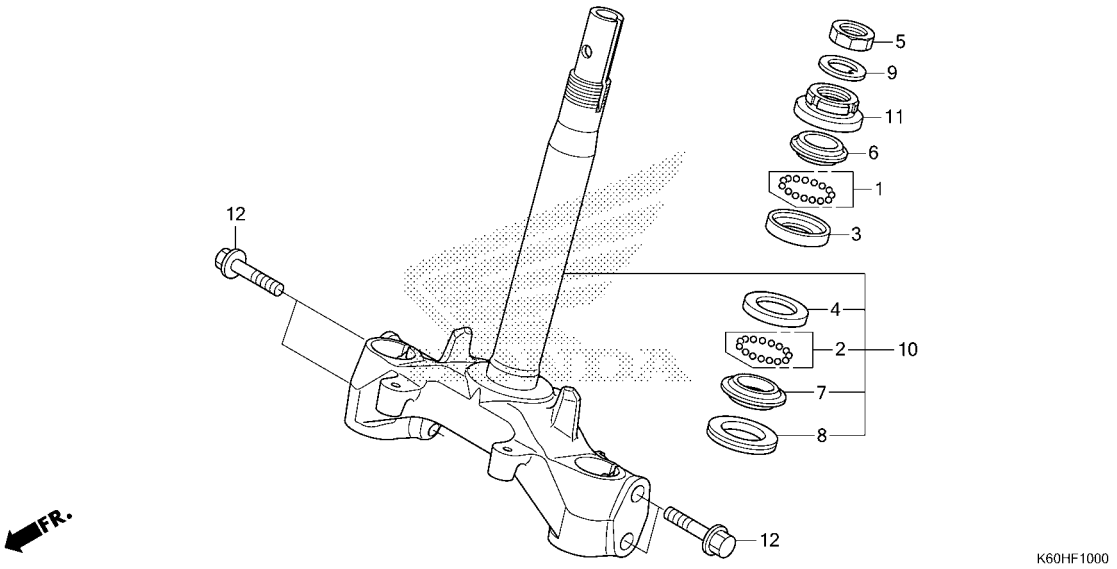

Ref. No.	Part No.	Description	Reqd. QTY ACB125CBF H	K	L	M	N	P	Serial No.	Parts catalogue code
1	06530-GBG-B20	BALL SET, STEEL, #6X23	1	1	1	1	1	1		
2	06531-GBG-B20	BALL SET, STEEL, #6X29	1	1	1	1	1	1		
3	50301-GN5-901	RACE, STEERING TOP BALL	1	1	1	1	1	1		
4	50302-GN5-900	RACE, STEERING BOTTOM BALL	1	1	1	1	1	1		
5	50306-GN5-900	NUT, STEERING STEM LOCK	1	1	1	1	1	1		
6	53211-GN5-900	RACE, STEERING TOP CONE	1	1	1	1	1	1		
7	53212-GN5-900	RACE, STEERING BOTTOM CONE	1	1	1	1	1	1		
8	53214-GN5-900	DUST SEAL, STEERING HEAD	1	1	1	1	1	1		
9	53216-GN5-830	WASHER, STEERING STEM NUT	1	1	1	1	1	1		
10	53219-K59-A10	STEM SUB ASSY., STEERING	1	-	-	-	-	-		
	53219-K59-A70	.....	-	1	1	1	1	1		
11	53220-GN5-900	THREAD COMP., STEERING HEAD TOP	1	1	1	1	1	1		
12	95801-10045-08	BOLT, FLANGE, 10X45	4	4	4	4	4	4		

F-11 FRONT FENDER

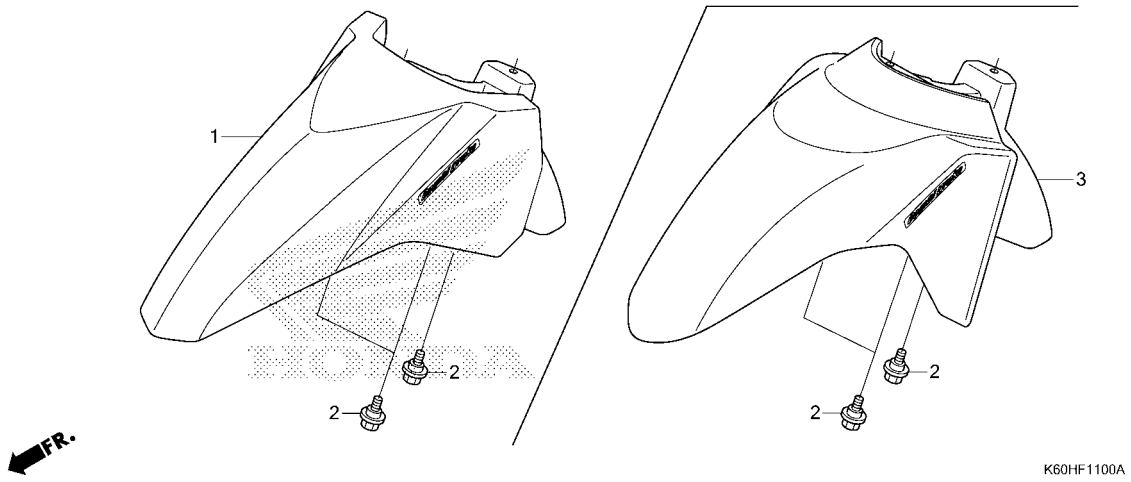

Ref. No.	Part No.	Description	Reqd. QTY ACB125CBF H	K	L	M	N	P	Serial No.	Parts catalogue code
1	61110-K60-H40ZB	FENDER SET, FR.(WL) *TYPE3*.....	1	-	-	-	-	-		
	61110-K60-H40ZC	*TYPE2*.....	1	-	-	-	-	-		
	61110-K60-H40ZD	*TYPE1*.....	1	-	-	-	-	-		
2	90116-KVB-900	BOLT, FLANGE, 6MM·····	3	3	3	3	3	3		
3	61110-K59-A70ZA	FENDER SET, FR.(WL) *TYPE9*.....	-	1	1	-	-	-		
	61110-K59-A70ZB	*TYPE8*.....	-	1	-	-	-	-		
	61110-K59-A70ZJ	*TYPE10*.....	-	1	-	-	-	-		
	61110-K59-A70ZN	*TYPE11*.....	-	1	-	-	-	-		
	61110-K59-A80ZD	*TYPE3*.....	-	-	1	-	-	-		
	61110-K59-A80ZE	*TYPE2*.....	-	-	1	-	-	-		
	61110-K59-A80ZF	*TYPE1*.....	-	-	1	-	-	-		
	61110-K59-HA0ZA	*TYPE7*.....	-	-	-	1	-	-		
	61110-K59-HA0ZB	*TYPE6*.....	-	-	-	1	-	-		
	61110-K59-HA0ZC	*TYPE5*.....	-	-	-	1	-	-		
	61110-K59-HA0ZD	*TYPE4*.....	-	-	-	1	-	-		
	61110-K2V-N10ZA	*TYPE8*.....	-	-	-	-	1	-		
	61110-K2V-N10ZB	*TYPE7*.....	-	-	-	-	1	-		
	61110-K2V-N10ZC	*TYPE6*.....	-	-	-	-	1	-		
	61110-K2V-N10ZE	*TYPE4*.....	-	-	-	-	1	-		
	61110-K2V-N10ZG	*TYPE2*.....	-	-	-	-	1	-		
	61110-K2V-H20ZA	*TYPE5*.....	-	-	-	-	-	1		
	61110-K2V-H20ZB	*TYPE4*.....	-	-	-	-	-	1		
	61110-K2V-H20ZC	*TYPE3*.....	-	-	-	-	-	1		
	61110-K2V-H20ZD	*TYPE2*.....	-	-	-	-	-	1		
	61110-K2V-H20ZE	*TYPE1*.....	-	-	-	-	-	1		

F-12 FRONT COVER(ACB125CBFH)

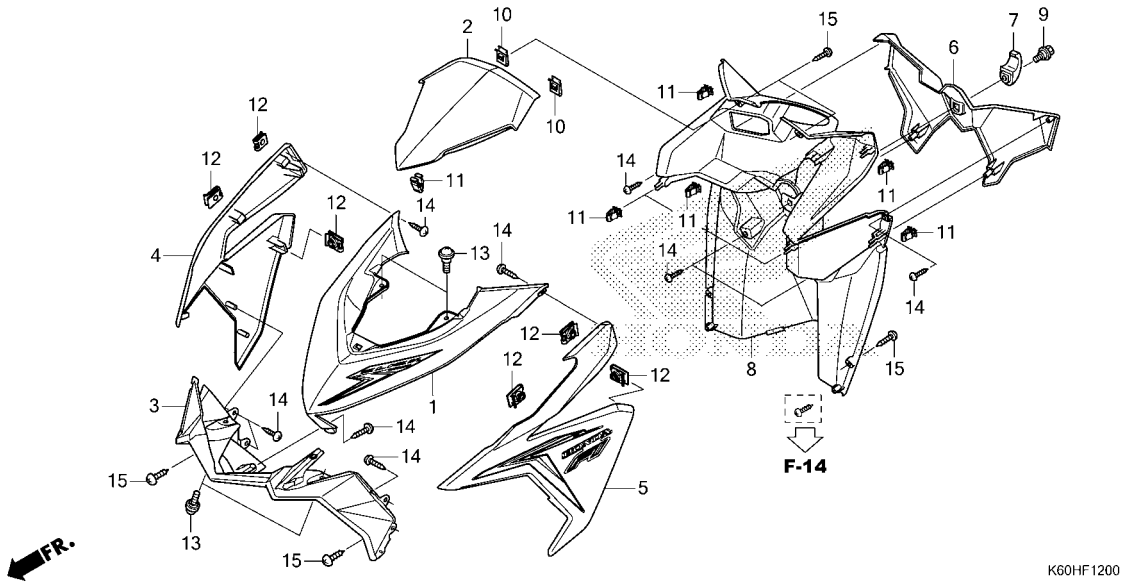

Ref. No.	Part No.	Description	Reqd. QTY ACB125CBF H	K	L	M	N	P	Serial No.	Parts catalogue code
1	64300-K60-H40ZA	COVER SET, FR.(WL)								
		TYPE3.....	1	-	-	-	-	-		
	64300-K60-H40ZB	*TYPE2*.....	1	-	-	-	-	-		
	64300-K60-H40ZC	*TYPE1*.....	1	-	-	-	-	-		
	64300-K60-H40ZD	*TYPE4*.....	1	-	-	-	-	-		
2	64302-K60-T00ZP	COVER, FR. TOP								
		NH1.....BLACK	1	-	-	-	-	-		
3	64303-K59-A10ZA	GARNISH, FR.								
		TBLACK.....BLACK	1	-	-	-	-	-		
4	64500-K60-H40ZA	COVER SET, R. FR.(WL)								
		TYPE4.....	1	-	-	-	-	-		
	64500-K60-H40ZB	*TYPE3*.....	1	-	-	-	-	-		
	64500-K60-H40ZD	*TYPE1*.....	1	-	-	-	-	-		
	64500-K60-H40ZE	*TYPE2 1*.....	1	-	-	-	-	-		
5	64600-K60-H40ZA	COVER SET, L. FR.(WL)								
		TYPE4.....	1	-	-	-	-	-		
	64600-K60-H40ZB	*TYPE3*.....	1	-	-	-	-	-		
	64600-K60-H40ZD	*TYPE1*.....	1	-	-	-	-	-		
	64600-K60-H40ZE	*TYPE2 1*.....	1	-	-	-	-	-		
6	81131-K59-A10ZJ	COVER, RACK								
		NH1.....BLACK	1	-	-	-	-	-		
7	81132-GAH-000YV	HOOK, LUGGAGE								
		TBLACK.....BLACK	1	-	-	-	-	-		
8	81141-K59-A10ZB	COVER, INNER LOWER								
		TBLACK.....BLACK	1	-	-	-	-	-		
9	90107-KVB-900	BOLT, SPECIAL, 6MM·····	1	-	-	-	-	-		
10	90302-KWW-A00	NUT, SPRING, 4MM·····	2	-	-	-	-	-		

F-12 FRONT COVER(ACB125CBFH)

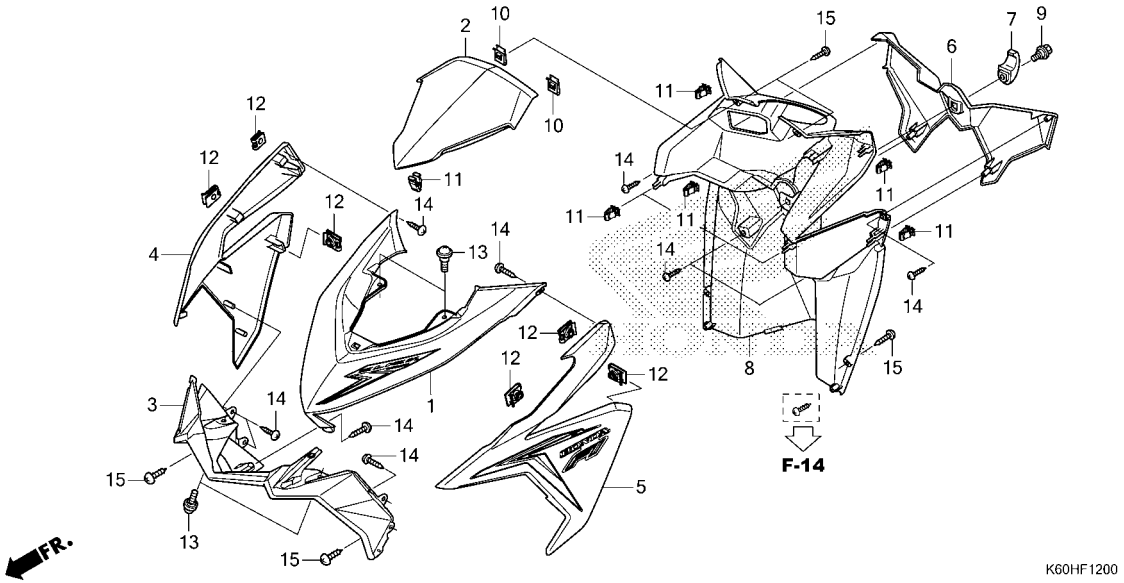

Ref. No.	Part No.	Description	Reqd. QTY ACB125CBF H	K	L	M	N	P	Serial No.	Parts catalogue code
11	90666-K59-A11	CLIP, SNAP FITTING(PO)·····	7	-	-	-	-	-		
	90666-SDA-A01	CLIP, SNAP FITTING(PO) (NATURAL)	7	-	-	-	-	-		
12	90677-KAN-T00	NUT, CLIP, 5MM·····	6	-	-	-	-	-		
13	91509-GE2-760	SCREW, PAN, 5X11.5·····	4	-	-	-	-	-		
14	93903-24310	SCREW, TAPPING, 4X12·····	11	-	-	-	-	-		
15	93903-24380	SCREW, TAPPING, 4X12·····	6	-	-	-	-	-		

F-12-1 FRONT COVER(ACB125CBFK/L/M/N)

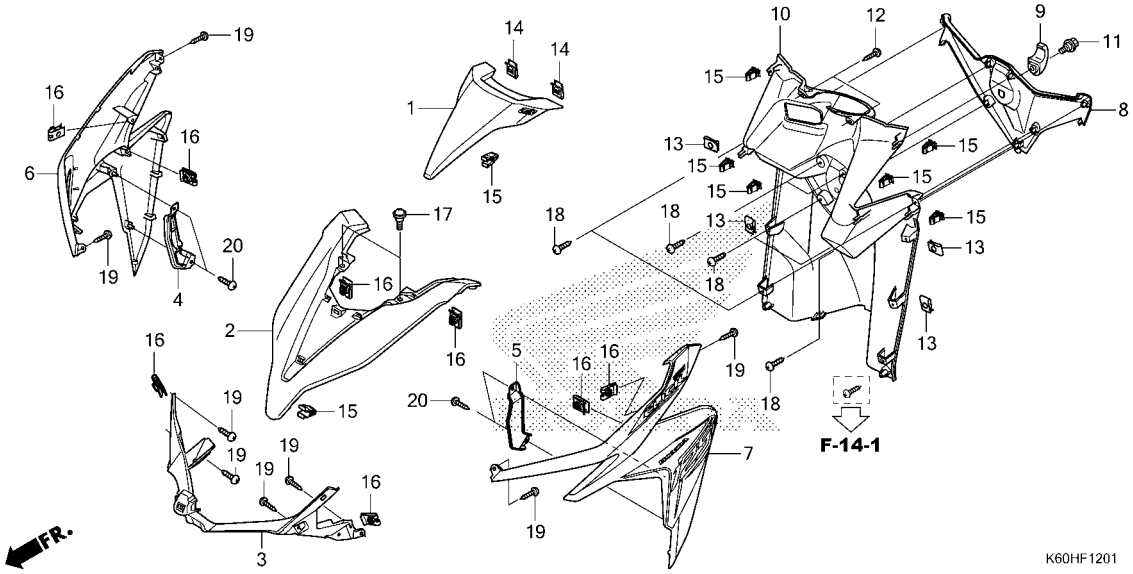

Ref. No.	Part No.	Description	Reqd. QTY ACB125CBF H	K	L	M	N	P	Serial No.	Parts catalogue code
1	64200-K60-H50ZE	COVER SET, FR. TOP(WL)								
		NH1.....BLACK	-	1	1	1	1	-		
2	64301-K59-A70ZK	COVER, FR.								
		YR271.....NITRIC ORANGE	-	1	1	1	1	-		
	64301-K59-A70ZT	*B210M*...VIVID BLUE METALLIC	-	1	1	1	1	-		
	64301-K59-A70ZN	*RP195M* SPACE MAGENTA METALLIC	-	1	-	-	-	-		
	64301-K59-A70ZU	*NH229MU* ANCHOR GRAY METALLIC-U	-	1	-	-	-	-		
	64301-K59-A70YB	*R383*.....VALIANT RED	-	-	1	1	1	-		
	64301-K59-A70ZC	*NH436M* MAT GUNPOWDER BLACK METALLIC	-	-	1	1	1	-		
	64301-K59-A70YK	*NHC51P* MAT PEARL CRATER WHITE	-	-	-	-	1	-		
3	64303-K59-A70ZD	GARNISH, FR.								
		TBLACK.....BLACK	-	1	1	1	1	-		
4	64330-K59-A70ZC	GARNISH, R. INNER								
		TBLACK.....BLACK	-	1	1	1	1	-		
5	64430-K59-A70ZC	GARNISH, L. INNER								
		TBLACK.....BLACK	-	1	1	1	1	-		
6	64500-K60-H50ZA	COVER SET, R. FR.(WL)								
		TYPE4.....	-	1	-	-	-	-		
	64500-K60-H50ZB	*TYPE3*.....	-	1	-	-	-	-		
	64500-K60-H50ZC	*TYPE2*.....	-	1	-	-	-	-		
	64500-K60-H50ZD	*TYPE1*.....	-	1	-	-	-	-		
	64500-K60-H70ZA	*TYPE4*.....	-	-	1	-	-	-		
	64500-K60-H70ZB	*TYPE3*.....	-	-	1	-	-	-		
	64500-K60-H70ZC	*TYPE2*.....	-	-	1	-	-	-		

F-12-1 FRONT COVER(ACB125CBFK/L/M/N)

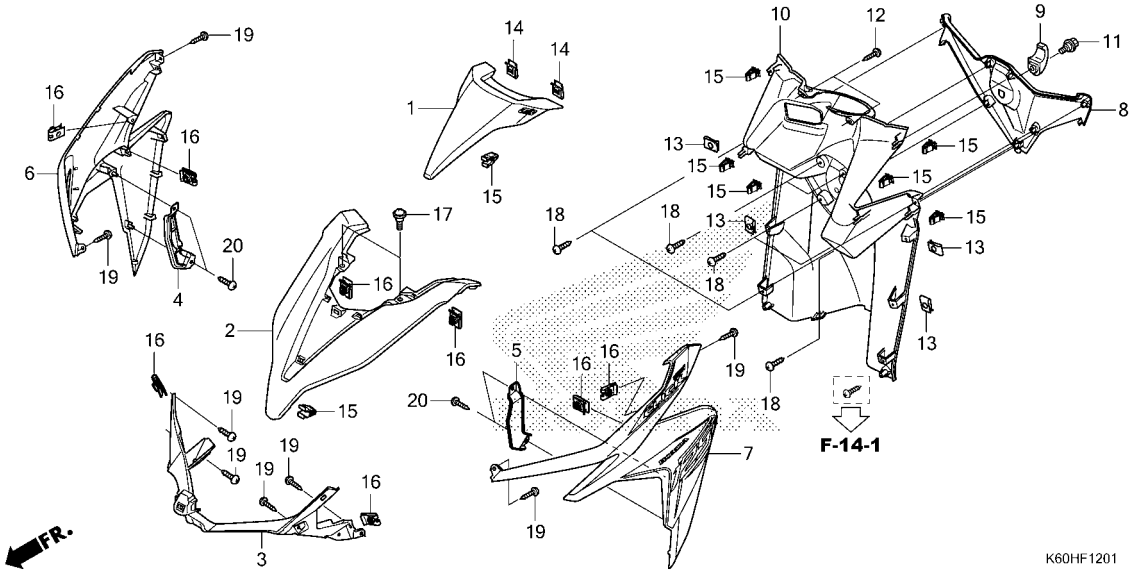

Ref. No.	Part No.	Description	Reqd. QTY ACB125CBF H	K	L	M	N	P	Serial No.	Parts catalogue code
(6)	64500-K60-H70ZD	COVER SET, R. FR.(WL)								
		TYPE1.....	-	-	1	-	-	-		
	64500-K60-HA0ZA	*TYPE4*.....	-	-	-	1	-	-		
	64500-K60-HA0ZB	*TYPE3*.....	-	-	-	1	-	-		
	64500-K60-HA0ZC	*TYPE2*.....	-	-	-	1	-	-		
	64500-K60-HA0ZD	*TYPE1*.....	-	-	-	1	-	-		
	64500-K2V-H00ZA	*TYPE5*.....	-	-	-	-	1	-		
	64500-K2V-H00ZB	*TYPE4*.....	-	-	-	-	1	-		
	64500-K2V-H00ZC	*TYPE3*.....	-	-	-	-	1	-		
	64500-K2V-H00ZD	*TYPE2*.....	-	-	-	-	1	-		
	64500-K2V-H00ZE	*TYPE1*.....	-	-	-	-	1	-		
7	64600-K60-H50ZA	COVER SET, L. FR.(WL)								
		TYPE4.....	-	1	-	-	-	-		
	64600-K60-H50ZB	*TYPE3*.....	-	1	-	-	-	-		
	64600-K60-H50ZC	*TYPE2*.....	-	1	-	-	-	-		
	64600-K60-H50ZD	*TYPE1*.....	-	1	-	-	-	-		
	64600-K60-H70ZA	*TYPE4*.....	-	-	1	-	-	-		
	64600-K60-H70ZB	*TYPE3*.....	-	-	1	-	-	-		
	64600-K60-H70ZC	*TYPE2*.....	-	-	1	-	-	-		
	64600-K60-H70ZD	*TYPE1*.....	-	-	1	-	-	-		
	64600-K60-HA0ZA	*TYPE4*.....	-	-	-	1	-	-		
	64600-K60-HA0ZB	*TYPE3*.....	-	-	-	1	-	-		
	64600-K60-HA0ZC	*TYPE2*.....	-	-	-	1	-	-		
	64600-K60-HA0ZD	*TYPE1*.....	-	-	-	1	-	-		
	64600-K2V-H00ZA	*TYPE5*.....	-	-	-	-	1	-		
	64600-K2V-H00ZB	*TYPE4*.....	-	-	-	-	1	-		
	64600-K2V-H00ZC	*TYPE3*.....	-	-	-	-	1	-		
	64600-K2V-H00ZD	*TYPE2*.....	-	-	-	-	1	-		
	64600-K2V-H00ZE	*TYPE1*.....	-	-	-	-	1	-		

F-12-1 FRONT COVER(ACB125CBFK/L/M/N)

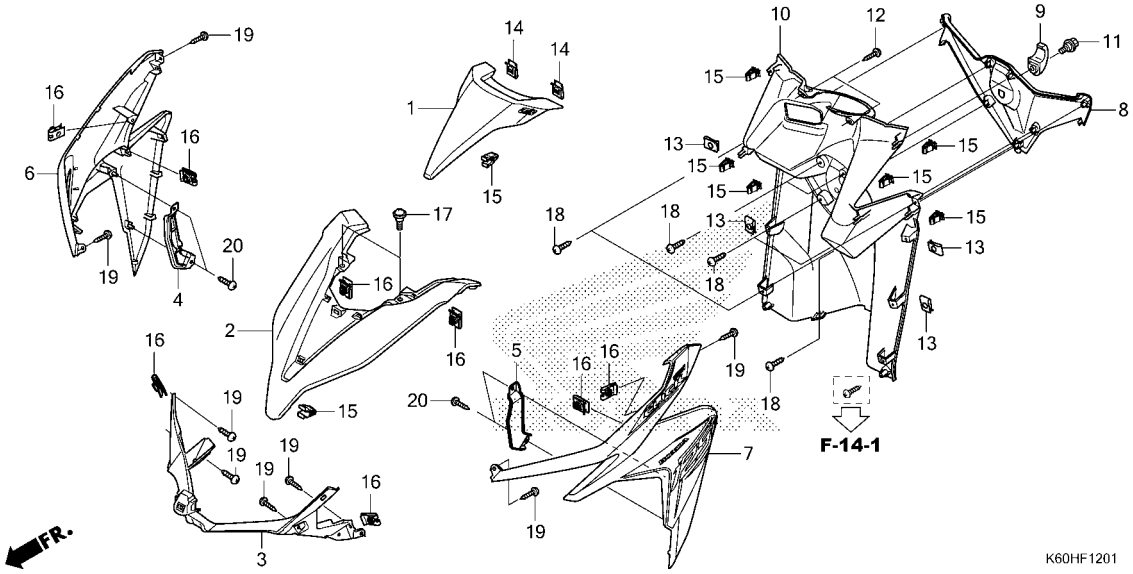

Ref. No.	Part No.	Description	Reqd. QTY ACB125CBF H	K	L	M	N	P	Serial No.	Parts catalogue code
8	81131-K59-A70ZK	COVER, RACK *YR271*.....NITRIC ORANGE	-	1	-	-	-	-		
	81131-K59-A70ZN	*RP195M* SPACE MAGENTA METALLIC	-	1	-	-	-	-		
	81131-K59-A70ZT	*B210M*...VIVID BLUE METALLIC	-	1	-	-	-	-		
	81131-K59-A70ZU	*NH229MU* ANCHOR GRAY METALLIC-U	-	1	-	-	-	-		
	81131-K59-A70YA	*NH1*.....BLACK	-	-	1	1	1	-		
9	81132-GAH-000YV	HOOK, LUGGAGE *TBLACK*.....BLACK	-	1	1	1	1	-		
10	81141-K60-B60ZA	COVER, INNER LOWER *TBLACK*.....BLACK	-	1	1	1	1	-		
11	90107-KVB-900	BOLT, SPECIAL, 6MM·····	-	1	1	1	1	-		
12	90133-K59-A70	SCREW, TAPPING, 5X16(PO)(TORX)	-	2	2	2	2	-		
	90133-SV4-003	SCREW, TAPPING, 5X16(PO)·····	-	2	2	2	2	-		
13	90302-KWW-A00	NUT, SPRING, 4MM·····	-	4	4	4	4	-		
14	90344-KRB-900	NUT, CLIP, 5MM·····	-	2	2	2	2	-		
15	90666-K59-A11	CLIP, SNAP FITTING(PO)·····	-	8	8	8	8	-		
	90666-SDA-A01	CLIP, SNAP FITTING(PO) (NATURAL)	-	8	8	8	8	-		
16	90677-KAN-T00	NUT, CLIP, 5MM·····	-	8	8	8	8	-		
17	91509-GE2-760	SCREW, PAN, 5X11.5·····	-	2	2	2	2	-		
18	93903-24310	SCREW, TAPPING, 4X12·····	-	7	7	7	7	-		
19	93903-34310	SCREW, TAPPING, 4X12·····	-	8	8	8	8	-		
20	93903-34410	SCREW, TAPPING, 4X16·····	-	4	4	4	4	-		

F-12-2 FRONT COVER(ACB125CBFP)

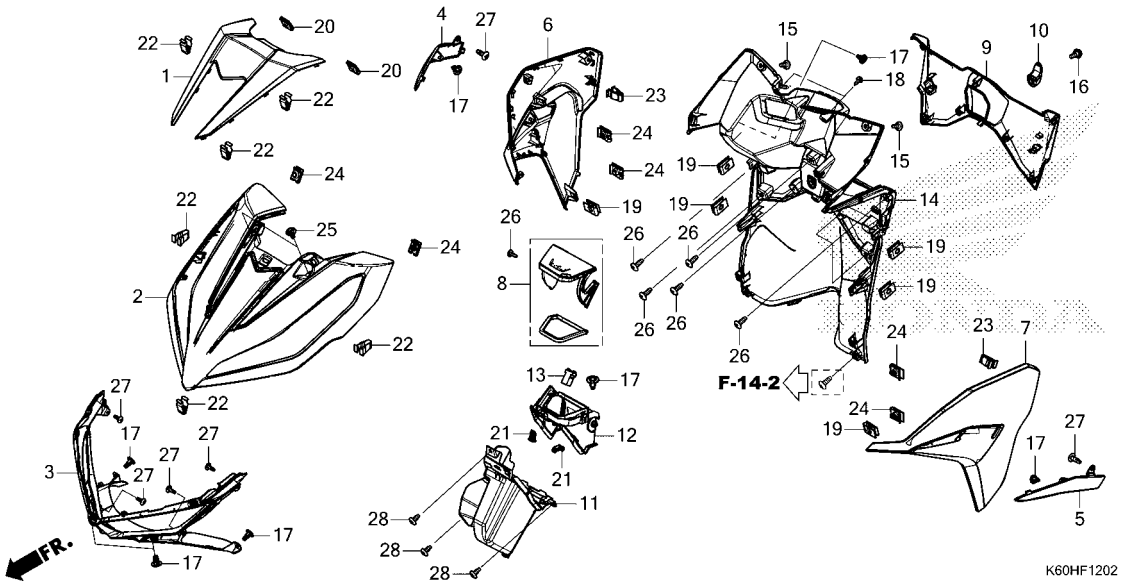

Ref. No.	Part No.	Description	Reqd. QTY ACB125CBF H	K	L	M	N	P	Serial No.	Parts catalogue code
1	64200-K2V-H20ZA	COVER SET, FR. TOP(WL)								
		R366P....PEARL AFFLUENT RED	-	-	-	-	-	1		
	64200-K2V-H20ZB	*PB421M* NIGHTTIDE BLUE METALLIC	-	-	-	-	-	1		
	64200-K2V-H20ZC	*NH341P*.PEARL FADELESS WHITE	-	-	-	-	-	1		
	64200-K2V-H20ZD	*NHC53P*.....PEARL SMOKY GRAY	-	-	-	-	-	1		
	64200-K2V-H20ZE	*NHB25M* POSEIDON BLACK METALLIC	-	-	-	-	-	1		
2	64300-K2V-H20ZA	COVER SET, FR.(WL)								
		TYPE5.....	-	-	-	-	-	1		
	64300-K2V-H20ZB	*TYPE4*.....	-	-	-	-	-	1		
	64300-K2V-H20ZC	*TYPE3*.....	-	-	-	-	-	1		
	64300-K2V-H20ZD	*TYPE2*.....	-	-	-	-	-	1		
	64300-K2V-H20ZE	*TYPE1*.....	-	-	-	-	-	1		
3	64303-K2V-N30ZA	GARNISH, FR.								
		TBLACK.....BLACK	-	-	-	-	-	1		
4	64320-K2V-N30ZA	GARNISH, R. FR.								
		TBLACK.....BLACK	-	-	-	-	-	1		
5	64420-K2V-N30ZA	GARNISH, L. FR.								
		TBLACK.....BLACK	-	-	-	-	-	1		
6	64500-K2V-H20ZA	COVER SET, R. FR.(WL)								
		TYPE5.....	-	-	-	-	-	1		
	64500-K2V-H20ZB	*TYPE4*.....	-	-	-	-	-	1		
	64500-K2V-H20ZC	*TYPE3*.....	-	-	-	-	-	1		
	64500-K2V-H20ZD	*TYPE2*.....	-	-	-	-	-	1		
	64500-K2V-H20ZE	*TYPE1*.....	-	-	-	-	-	1		
7	64600-K2V-H20ZA	COVER SET, L. FR.(WL)								
		TYPE5.....	-	-	-	-	-	1		

F-12-2 FRONT COVER(ACB125CBFP)

Ref. No.	Part No.	Description	Reqd. QTY ACB125CBF H	K	L	M	N	P	Serial No.	Parts catalogue code
(7)	64600-K2V-H20ZB	COVER SET, L. FR.(WL)								
		TYPE4.....	-	-	-	-	-	1		
	64600-K2V-H20ZC	*TYPE3*.....	-	-	-	-	-	1		
	64600-K2V-H20ZD	*TYPE2*.....	-	-	-	-	-	1		
	64600-K2V-H20ZE	*TYPE1*.....	-	-	-	-	-	1		
8	81130-K2V-N30ZA	LID ASSY., INNER POCKET								
		TBLACK.....BLACK	-	-	-	-	-	1		
9	81131-K2V-N30ZA	COVER, RACK								
		R366P....PEARL AFFLUENT RED	-	-	-	-	-	1		
	81131-K2V-N30ZB	*PB421M*								
		NIGHTTIDE BLUE METALLIC	-	-	-	-	-	1		
	81131-K2V-N30ZC	*NH341P*.PEARL FADELESS WHITE	-	-	-	-	-	1		
	81131-K2V-N30ZD	*NHC53P*.....PEARL SMOKY GRAY	-	-	-	-	-	1		
	81131-K2V-N30ZE	*NHB25M*								
		POSEIDON BLACK METALLIC	-	-	-	-	-	1		
10	81132-GAH-000YV	HOOK, LUGGAGE								
		TBLACK.....BLACK	-	-	-	-	-	1		
11	81132-K2V-N30	POCKET, L. INNER·····	-	-	-	-	-	1		
12	81136-K2V-N30	BOX, INNER UPPER·····	-	-	-	-	-	1		
13	81137-K2C-V01	LATCH·····	-	-	-	-	-	1		
14	81141-K2V-N30ZA	COVER, INNER								
		TBLACK.....BLACK	-	-	-	-	-	1		
15	90101-K2F-N00	SCREW, PAN, 5X13.5·····	-	-	-	-	-	2		
16	90107-KVB-900	BOLT, SPECIAL, 6MM·····	-	-	-	-	-	1		
17	90116-K0A-E11	RIVET, PUSH, 6MM·····	-	-	-	-	-	8		
18	90133-K59-A70	SCREW, TAPPING, 5X16(PO)(TORX)	-	-	-	-	-	2		
	90133-SV4-003	SCREW, TAPPING, 5X16(PO)·····	-	-	-	-	-	2		
19	90302-KWW-A00	NUT, SPRING, 4MM·····	-	-	-	-	-	6		
20	90344-KRB-900	NUT, CLIP, 5MM·····	-	-	-	-	-	2		
21	90651-K14-A31	CLIP, SLIDE·····	-	-	-	-	-	2		
22	90666-K59-A11	CLIP, SNAP FITTING(PO)·····	-	-	-	-	-	6		
	90666-SDA-A01	CLIP, SNAP FITTING(PO)								
		(NATURAL)	-	-	-	-	-	6		
23	90666-SDA-A01	CLIP, SNAP FITTING(PO)								
		(NATURAL)	-	-	-	-	-	2		
24	90677-KAN-T00	NUT, CLIP, 5MM·····	-	-	-	-	-	6		
25	91509-GE2-760	SCREW, PAN, 5X11.5·····	-	-	-	-	-	2		
26	93903-24380	SCREW, TAPPING, 4X12·····	-	-	-	-	-	9		
27	93903-34310	SCREW, TAPPING, 4X12·····	-	-	-	-	-	6		
28	93903-35210	SCREW, TAPPING, 5X12·····	-	-	-	-	-	3		

F-14 FLOOR STEP(ACB125CBFH)

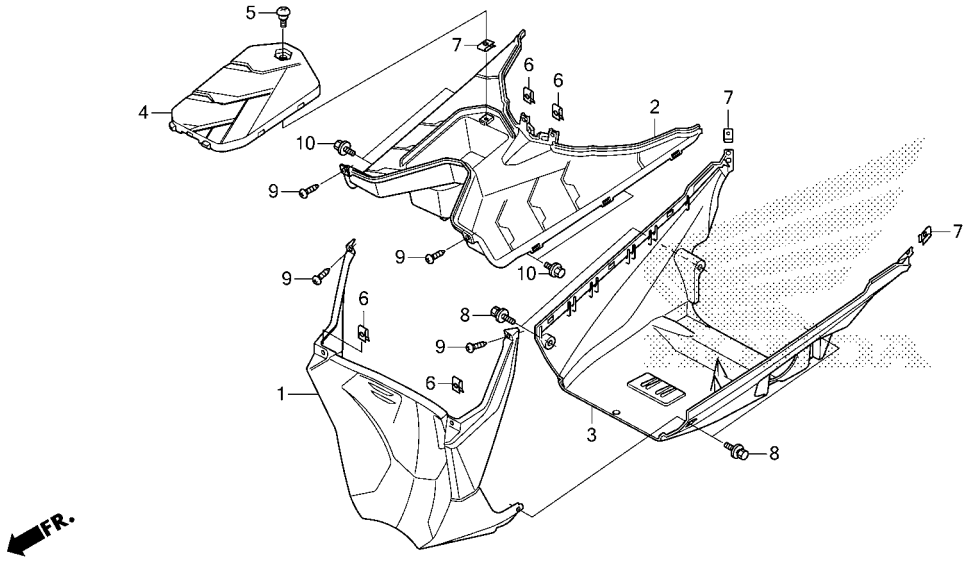

K60HF1400

Ref. No.	Part No.	Description	Reqd. QTY ACB125CBF H	K	L	M	N	P	Serial No.	Parts catalogue code
1	64308-K59-A10ZB	COVER, FR. LOWER *TBLACK*.....BLACK	1	-	-	-	-	-		
2	64310-K59-A10ZB	STEP, FLOOR *TBLACK*.....BLACK	1	-	-	-	-	-		
3	64340-K59-A10ZB	COVER, UNDER *TBLACK*.....BLACK	1	-	-	-	-	-		
4	64460-K59-A10ZB	LID, BATTERY *TBLACK*.....BLACK	1	-	-	-	-	-		
5	90104-KPH-900	SCREW, SPECIAL, 5MM·····	1	-	-	-	-	-		
6	90302-KWW-A00	NUT, SPRING, 4MM·····	4	-	-	-	-	-		
7	90677-KAN-T00	NUT, CLIP, 5MM·····	3	-	-	-	-	-		
8	93404-06012-00	BOLT-WASHER, 6X12·····	4	-	-	-	-	-		
9	93903-24310	SCREW, TAPPING, 4X12·····	4	-	-	-	-	-		
10	95701-06010-00	BOLT, FLANGE, 6X10·····	4	-	-	-	-	-		

F-14-1 FLOOR STEP(ACB125CBFK/L/M/N)

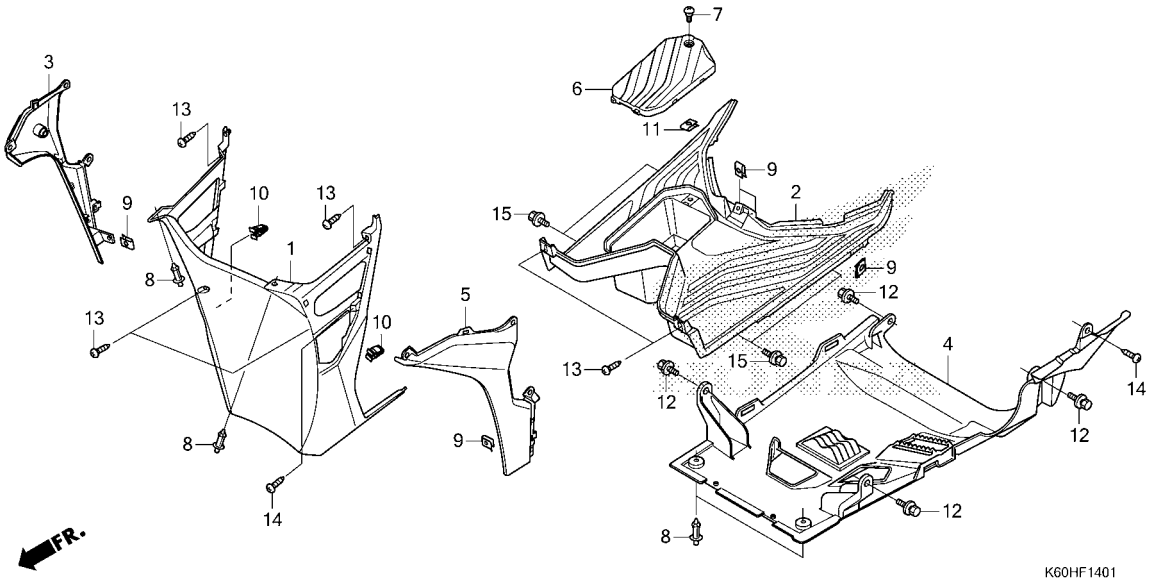

Ref. No.	Part No.	Description	Reqd. QTY ACB125CBF H	K	L	M	N	P	Serial No.	Parts catalogue code
1	64308-K59-A70ZB	COVER, FR. LOWER *TBLACK*.....BLACK	-	1	1	1	1	-		
2	64310-K59-A70ZB	STEP, FLOOR *TBLACK*.....BLACK	-	1	1	1	1	-		
3	64320-K59-A70ZD	GARNISH, R. FR. *TBLACK*.....BLACK	-	1	1	1	1	-		
4	64340-K59-A70ZB	COVER, UNDER *TBLACK*.....BLACK	-	1	1	1	1	-		
5	64420-K59-A70ZD	GARNISH, L. FR. *TBLACK*.....BLACK	-	1	1	1	1	-		
6	64460-K59-A70ZB	LID, BATTERY *TBLACK*.....BLACK	-	1	1	1	1	-		
7	90104-KPH-900	SCREW, SPECIAL, 5MM	-	1	1	1	1	-		
8	90116-SP0-003	CLIP, BUMPER SEAL	-	4	4	4	4	-		
9	90302-KWW-A00	NUT, SPRING, 4MM	-	5	5	5	5	-		
10	90666-K59-A11	CLIP, SNAP FITTING(PO)	-	2	2	2	2	-		
	90666-SDA-A01	CLIP, SNAP FITTING(PO) (NATURAL)	-	2	2	2	2	-		
11	90677-KAN-T00	NUT, CLIP, 5MM	-	1	1	1	1	-		
12	93404-06012-00	BOLT-WASHER, 6X12	-	4	4	4	4	-		
13	93903-24310	SCREW, TAPPING, 4X12	-	6	6	6	6	-		
14	93903-24380	SCREW, TAPPING, 4X12	-	3	3	3	3	-		
15	95701-06012-00	BOLT, FLANGE, 6X12	-	4	4	4	4	-		

F-14-2 FLOOR STEP(ACB125CBFP)

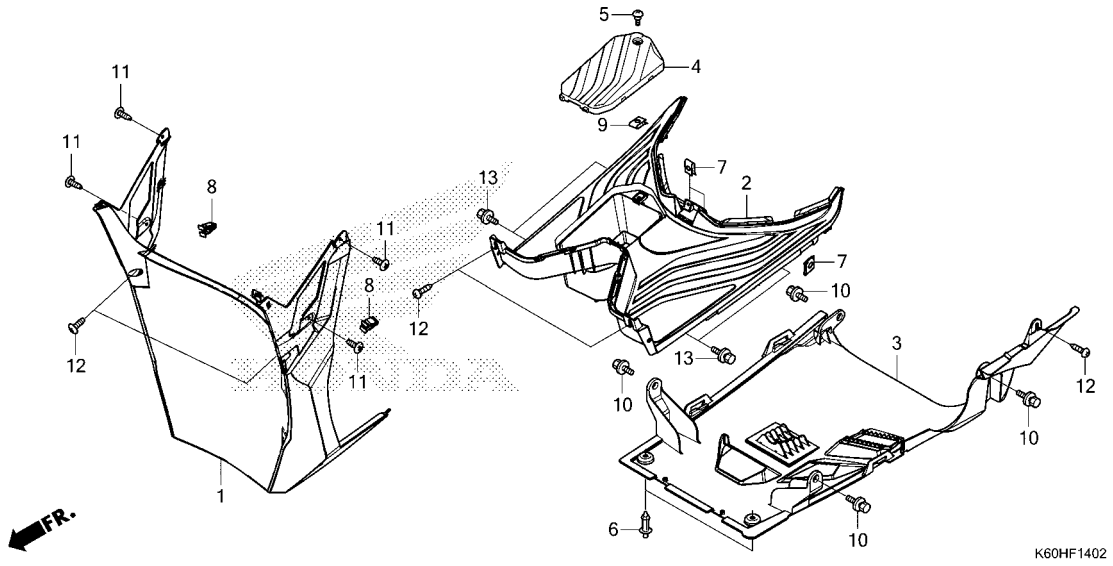

Ref. No.	Part No.	Description	Reqd. QTY ACB125CBF H	K	L	M	N	P	Serial No.	Parts catalogue code
1	64308-K2V-N30ZA	COVER, FR. LOWER *TBLACK*.....BLACK	-	-	-	-	-	1		
2	64310-K2V-N30ZA	STEP, FLOOR *TBLACK*.....BLACK	-	-	-	-	-	1		
3	64340-K59-A70ZB	COVER, UNDER *TBLACK*.....BLACK	-	-	-	-	-	1		
4	64460-K59-A70ZB	LID, BATTERY *TBLACK*.....BLACK	-	-	-	-	-	1		
5	90104-KPH-900	SCREW, SPECIAL, 5MM	-	-	-	-	-	1		
6	90116-SP0-003	CLIP, BUMPER SEAL	-	-	-	-	-	2		
7	90302-KWW-A00	NUT, SPRING, 4MM	-	-	-	-	-	3		
8	90666-K59-A11	CLIP, SNAP FITTING(PO)	-	-	-	-	-	2		
	90666-SDA-A01	CLIP, SNAP FITTING(PO) (NATURAL)	-	-	-	-	-	2		
9	90677-KAN-T00	NUT, CLIP, 5MM	-	-	-	-	-	1		
10	93404-06012-00	BOLT-WASHER, 6X12	-	-	-	-	-	4		
11	93903-24310	SCREW, TAPPING, 4X12	-	-	-	-	-	4		
12	93903-24380	SCREW, TAPPING, 4X12	-	-	-	-	-	5		
13	95701-06012-00	BOLT, FLANGE, 6X12	-	-	-	-	-	4		

F-14-10 PILLION STEP

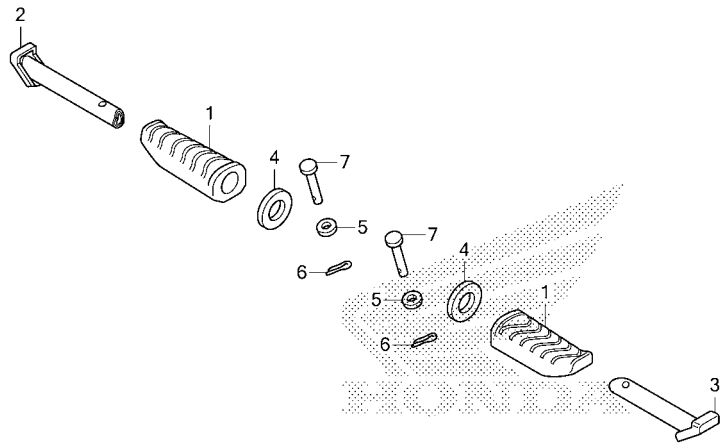

K60HF1410

Ref. No.	Part No.	Description	Reqd. QTY ACB125CBF H	K	L	M	N	P	Serial No.	Parts catalogue code
1	50710-KWB-600	RUBBER, PILLION STEP	2	2	2	2	2	2		
2	50711-KBP-900	BAR, R. PILLION STEP	1	1	1	1	1	1		
3	50712-KBP-900	BAR, L. PILLION STEP	1	1	1	1	1	1		
4	50715-KE8-000	PLATE, PILLION STEP SIDE	2	2	2	2	2	2		
5	94101-06000	WASHER, PLAIN, 6MM	2	2	2	2	2	2		
6	94201-16150	PIN, SPLIT, 1.6X15	2	2	2	2	2	2		
7	95015-81000	PIN A, PILLION STEP	2	2	2	2	2	2		

F-15 BODY COVER(ACB125CBFH)

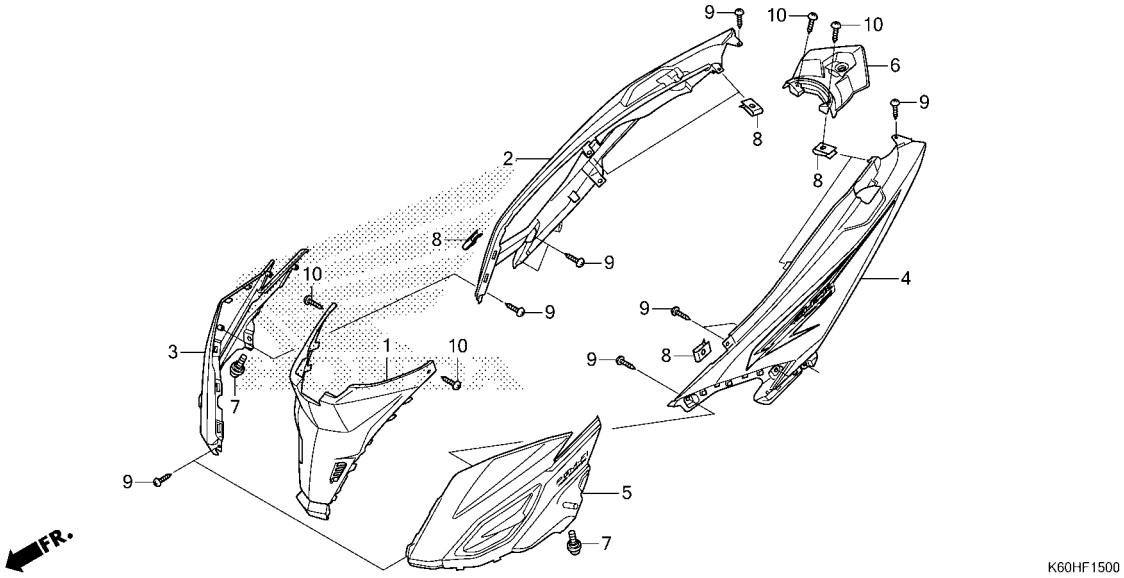

Ref. No.	Part No.	Description	Reqd. QTY ACB125CBF H	K	L	M	N	P	Serial No.	Parts catalogue code
1	80151-K59-A10ZB	COVER, CENTER								
		TBLACK.....BLACK	1	-	-	-	-	-		
2	83450-K60-H40ZA	COVER SET, R. BODY(WL)								
		TYPE4.....	1	-	-	-	-	-		
	83450-K60-H40ZB	*TYPE3*.....	1	-	-	-	-	-		
	83450-K60-H40ZD	*TYPE1*.....	1	-	-	-	-	-		
	83450-K60-H40ZE	*TYPE2 1*.....	1	-	-	-	-	-		
3	83520-K59-A10ZB	COVER, R. BODY SIDE								
		TBLACK.....BLACK	1	-	-	-	-	-		
4	83550-K60-H40ZA	COVER SET, L. BODY(WL)								
		TYPE4.....	1	-	-	-	-	-		
	83550-K60-H40ZB	*TYPE3*.....	1	-	-	-	-	-		
	83550-K60-H40ZD	*TYPE1*.....	1	-	-	-	-	-		
	83550-K60-H40ZE	*TYPE2 1*.....	1	-	-	-	-	-		
5	83620-K59-A10ZB	COVER, L. BODY SIDE								
		TBLACK.....BLACK	1	-	-	-	-	-		
6	83750-K59-A10ZM	COVER, RR. CENTER								
		NH1.....BLACK	1	-	-	-	-	-		
7	90117-KVG-A20	SCREW, PAN, 5X13	2	-	-	-	-	-		
8	90302-KWW-A00	NUT, SPRING, 4MM	6	-	-	-	-	-		
9	93903-24310	SCREW, TAPPING, 4X12	10	-	-	-	-	-		
10	93903-24380	SCREW, TAPPING, 4X12	4	-	-	-	-	-		

F-15-1 BODY COVER(ACB125CBFK/L/M/N)

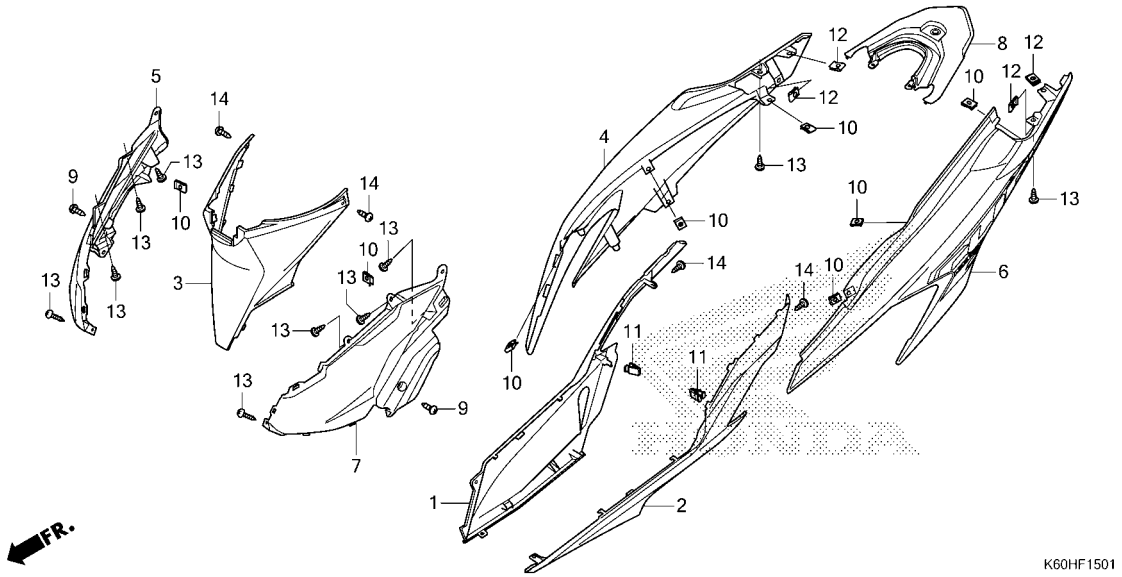

Ref. No.	Part No.	Description	Reqd. QTY ACB125CBF H	K	L	M	N	P	Serial No.	Parts catalogue code
1	64350-K60-B60ZB	COVER, R. UNDER SIDE *TBLACK*.....BLACK	-	1	1	1	1	-		
2	64360-K60-B60ZB	COVER, L. UNDER SIDE *TBLACK*.....BLACK	-	1	1	1	1	-		
3	80151-K59-A70ZD	COVER, CENTER *TBLACK*.....BLACK	-	1	1	1	1	-		
4	83450-K60-H50ZA	COVER SET, R. BODY(WL) *TYPE4*.....	-	1	-	-	-	-		
	83450-K60-H50ZB	*TYPE3*.....	-	1	-	-	-	-		
	83450-K60-H50ZC	*TYPE2*.....	-	1	-	-	-	-		
	83450-K60-H50ZD	*TYPE1*.....	-	1	-	-	-	-		
	83450-K60-H70ZA	*TYPE4*.....	-	-	1	-	-	-		
	83450-K60-H70ZB	*TYPE3*.....	-	-	1	-	-	-		
	83450-K60-H70ZC	*TYPE2*.....	-	-	1	-	-	-		
	83450-K60-H70ZD	*TYPE1*.....	-	-	1	-	-	-		
	83450-K60-HA0ZA	*TYPE4*.....	-	-	-	1	-	-		
	83450-K60-HA0ZB	*TYPE3*.....	-	-	-	1	-	-		
	83450-K60-HA0ZC	*TYPE2*.....	-	-	-	1	-	-		
	83450-K60-HA0ZD	*TYPE1*.....	-	-	-	1	-	-		
	83450-K2V-H00ZA	*TYPE5*.....	-	-	-	-	1	-		
	83450-K2V-H00ZB	*TYPE4*.....	-	-	-	-	1	-		
	83450-K2V-H00ZC	*TYPE3*.....	-	-	-	-	1	-		
	83450-K2V-H00ZD	*TYPE2*.....	-	-	-	-	1	-		
	83450-K2V-H00ZE	*TYPE1*.....	-	-	-	-	1	-		
5	83520-K59-A70ZB	COVER, R. BODY SIDE *TBLACK*.....BLACK	-	1	1	1	1	-		
6	83550-K60-H50ZA	COVER SET, L. BODY(WL) *TYPE4*.....	-	1	-	-	-	-		

F-15-1 BODY COVER(ACB125CBFK/L/M/N)

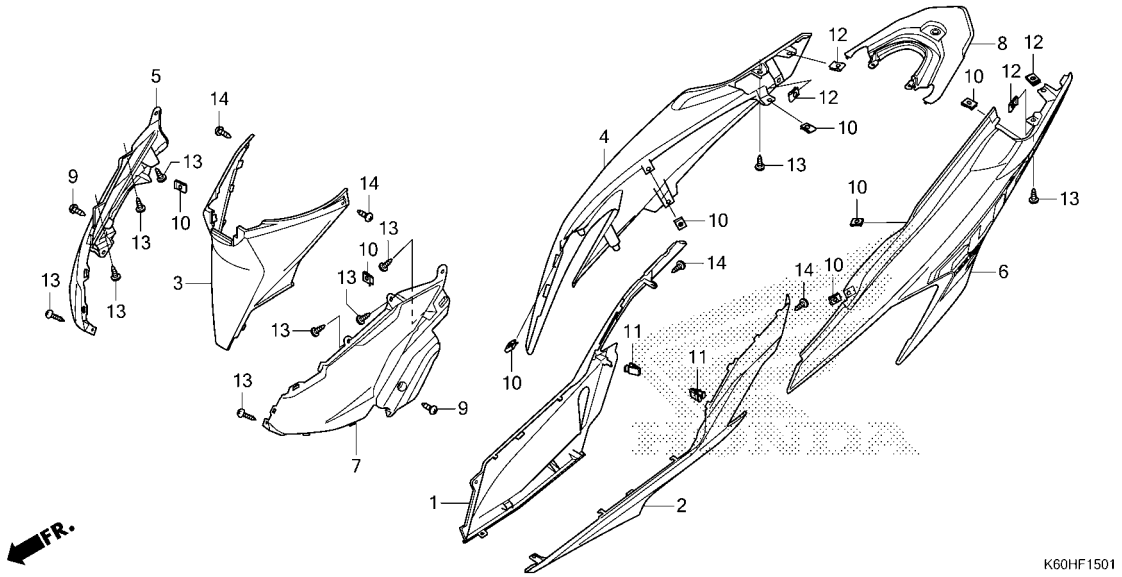

Ref. No.	Part No.	Description	Reqd. QTY ACB125CBF H	K	L	M	N	P	Serial No.	Parts catalogue code
(6)	83550-K60-H50ZB	COVER SET, L. BODY(WL)								
		TYPE3.....	-	1	-	-	-	-		
	83550-K60-H50ZC	*TYPE2*.....	-	1	-	-	-	-		
	83550-K60-H50ZD	*TYPE1*.....	-	1	-	-	-	-		
	83550-K60-H70ZA	*TYPE4*.....	-	-	1	-	-	-		
	83550-K60-H70ZB	*TYPE3*.....	-	-	1	-	-	-		
	83550-K60-H70ZC	*TYPE2*.....	-	-	1	-	-	-		
	83550-K60-H70ZD	*TYPE1*.....	-	-	1	-	-	-		
	83550-K60-HA0ZA	*TYPE4*.....	-	-	-	1	-	-		
	83550-K60-HA0ZB	*TYPE3*.....	-	-	-	1	-	-		
	83550-K60-HA0ZC	*TYPE2*.....	-	-	-	1	-	-		
	83550-K60-HA0ZD	*TYPE1*.....	-	-	-	1	-	-		
	83550-K2V-H00ZA	*TYPE5*.....	-	-	-	-	1	-		
	83550-K2V-H00ZB	*TYPE4*.....	-	-	-	-	1	-		
	83550-K2V-H00ZC	*TYPE3*.....	-	-	-	-	1	-		
	83550-K2V-H00ZD	*TYPE2*.....	-	-	-	-	1	-		
	83550-K2V-H00ZE	*TYPE1*.....	-	-	-	-	1	-		
7	83620-K59-A70ZB	COVER, L. BODY SIDE								
		TBLACK.....BLACK	-	1	1	1	1	-		
8	83750-K59-A70ZH	COVER, RR. CENTER								
		YR271.....NITRIC ORANGE	-	1	-	-	-	-		
	83750-K59-A70ZJ	*RP195M*								
		SPACE MAGENTA METALLIC	-	1	-	-	-	-		
	83750-K59-A70ZK	*NH229MU*								
		ANCHOR GRAY METALLIC-U	-	1	-	-	-	-		
	83750-K59-A70ZL	*B210M*...VIVID BLUE METALLIC	-	1	-	-	-	-		
	83750-K59-A70ZD	*NH1*.....BLACK	-	-	1	1	1	-		
9	90107-KGH-600	SCREW, 6X12	-	2	2	2	2	-		
10	90302-KWW-A00	NUT, SPRING, 4MM	-	8	8	8	8	-		

F-15-1 BODY COVER(ACB125CBFK/L/M/N)

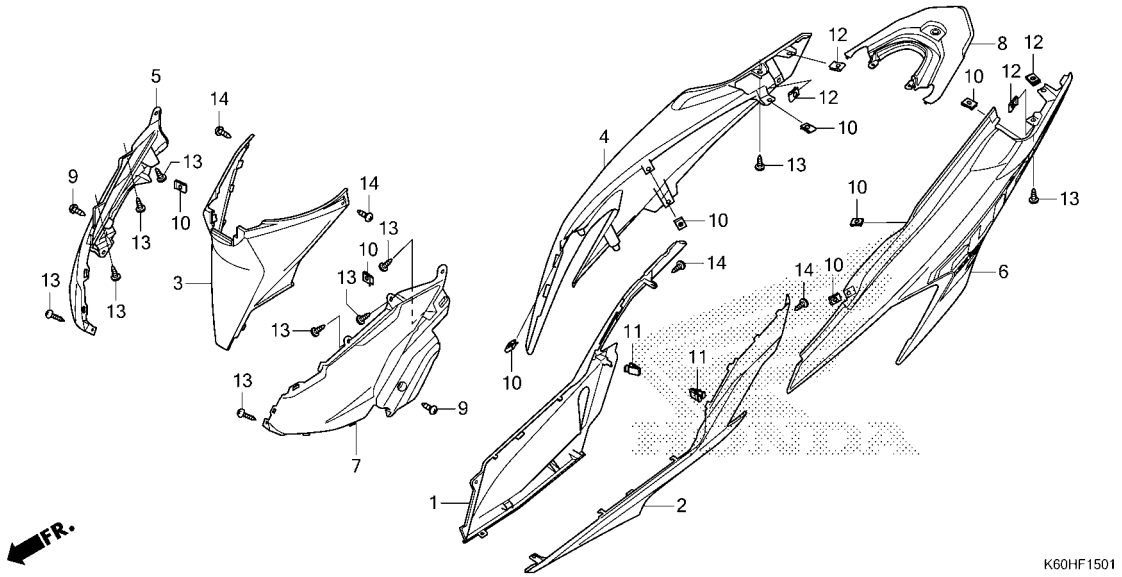

Ref. No.	Part No.	Description	Reqd. QTY ACB125CBF H	K	L	M	N	P	Serial No.	Parts catalogue code
11	90666-K59-A11	CLIP, SNAP FITTING(PO)·····	-	2	2	2	2	-		
	90666-SDA-A01	CLIP, SNAP FITTING(PO) (NATURAL)	-	2	2	2	2	-		
12	90677-KAN-T00	NUT, CLIP, 5MM·····	-	4	4	4	4	-		
13	93903-24310	SCREW, TAPPING, 4X12·····	-	10	10	10	10	-		
14	93903-24380	SCREW, TAPPING, 4X12·····	-	4	4	4	4	-		

F-15-2 BODY COVER(ACB125CBFP)

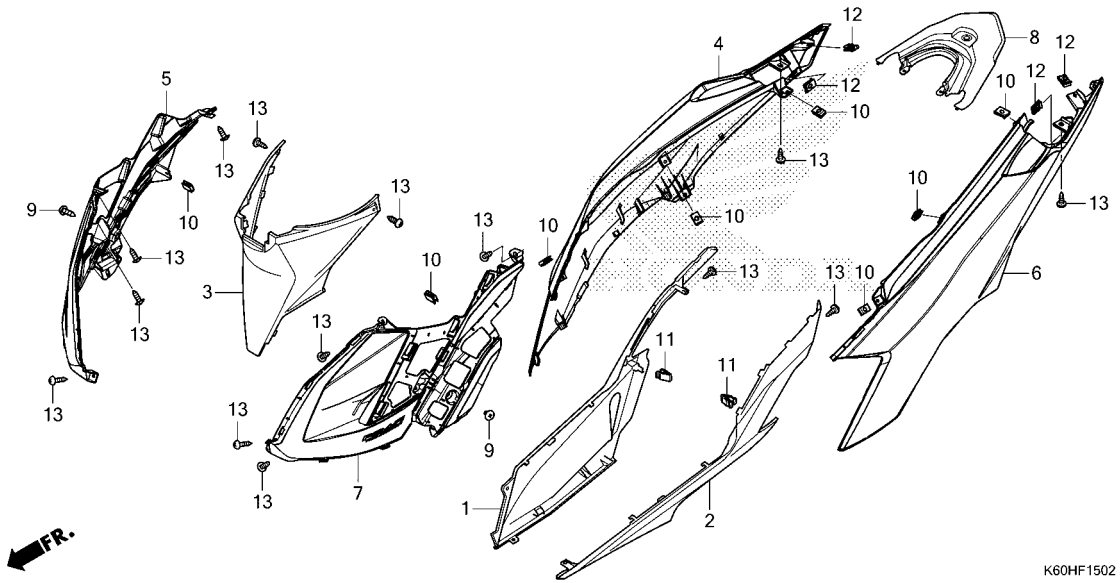

Ref. No.	Part No.	Description	Reqd. QTY ACB125CBF H	K	L	M	N	P	Serial No.	Parts catalogue code
1	64350-K60-B60ZB	COVER, R. UNDER SIDE *TBLACK*.....BLACK	-	-	-	-	-	1		
2	64360-K60-B60ZB	COVER, L. UNDER SIDE *TBLACK*.....BLACK	-	-	-	-	-	1		
3	80151-K2V-N30ZA	COVER, CENTER *TBLACK*.....BLACK	-	-	-	-	-	1		
4	83450-K2V-H20ZA	COVER SET, R. BODY(WL) *TYPE5*.....	-	-	-	-	-	1		
	83450-K2V-H20ZB	*TYPE4*.....	-	-	-	-	-	1		
	83450-K2V-H20ZC	*TYPE3*.....	-	-	-	-	-	1		
	83450-K2V-H20ZD	*TYPE2*.....	-	-	-	-	-	1		
	83450-K2V-H20ZE	*TYPE1*.....	-	-	-	-	-	1		
5	83520-K2V-N30ZA	COVER, R. BODY SIDE *TBLACK*.....BLACK	-	-	-	-	-	1		
6	83550-K2V-H20ZA	COVER SET, L. BODY(WL) *TYPE5*.....	-	-	-	-	-	1		
	83550-K2V-H20ZB	*TYPE4*.....	-	-	-	-	-	1		
	83550-K2V-H20ZC	*TYPE3*.....	-	-	-	-	-	1		
	83550-K2V-H20ZD	*TYPE2*.....	-	-	-	-	-	1		
	83550-K2V-H20ZE	*TYPE1*.....	-	-	-	-	-	1		
7	83620-K2V-N30ZA	COVER, L. BODY SIDE *TBLACK*.....BLACK	-	-	-	-	-	1		
8	83750-K59-A70ZC	COVER, RR. CENTER *NH341P*.PEARL FADELESS WHITE	-	-	-	-	-	1		
	83750-K59-A70ZS	*R366P*....PEARL AFFLUENT RED	-	-	-	-	-	1		
	83750-K59-A70ZT	*PB421M* NIGHTTIDE BLUE METALLIC	-	-	-	-	-	1		
	83750-K59-A70ZU	*NHC53P*.....PEARL SMOKY GRAY	-	-	-	-	-	1		

F-15-2 BODY COVER(ACB125CBFP)

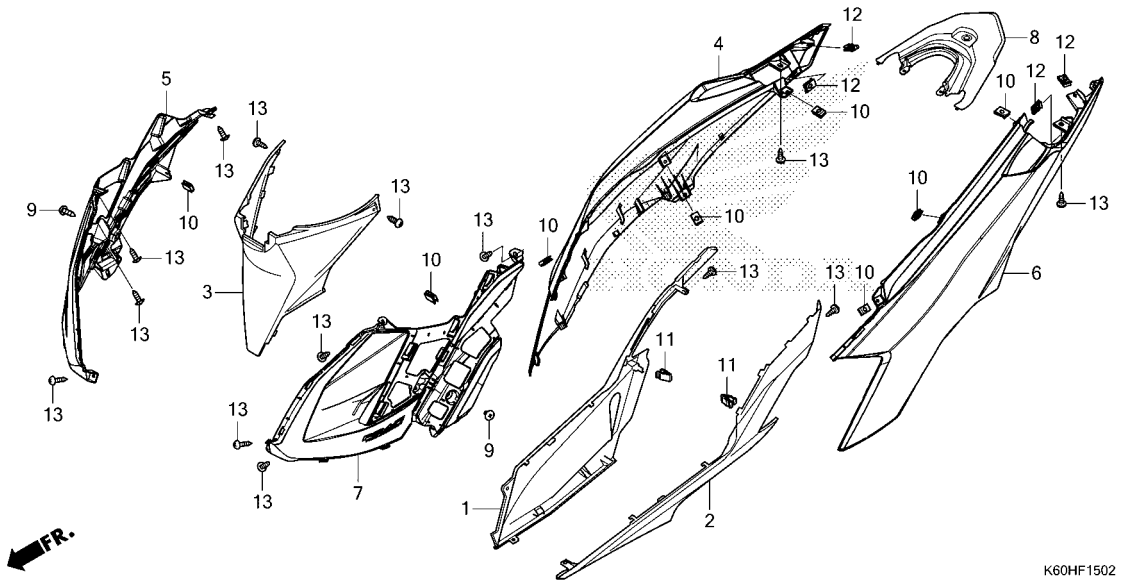

Ref. No.	Part No.	Description	Reqd. QTY ACB125CBF H	K	L	M	N	P	Serial No.	Parts catalogue code
(8)	83750-K59-A70ZV	COVER, RR. CENTER *NHB25M* POSEIDON BLACK METALLIC	-	-	-	-	-	1		
9	90107-KGH-600	SCREW, 6X12	-	-	-	-	-	2		
10	90302-KWW-A00	NUT, SPRING, 4MM	-	-	-	-	-	8		
11	90666-K59-A11	CLIP, SNAP FITTING(PO)	-	-	-	-	-	2		
	90666-SDA-A01	CLIP, SNAP FITTING(PO) (NATURAL)	-	-	-	-	-	2		
12	90677-KAN-T00	NUT, CLIP, 5MM	-	-	-	-	-	4		
13	93903-24380	SCREW, TAPPING, 4X12	-	-	-	-	-	14		

FRONT FORK

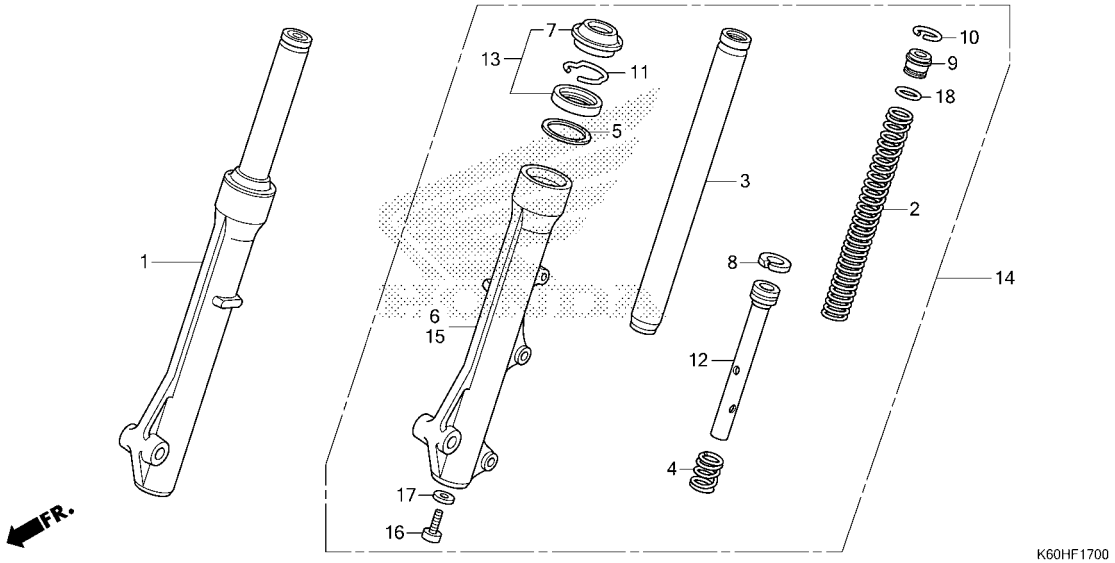

Ref. No.	Part No.	Description	Reqd. QTY ACB125CBF H	K	L	M	N	P	Serial No.	Parts catalogue code
1	51400-KZR-601	FORK ASSY., R. FR.(SHOWA)····	1	-	-	-	-	-		
	51400-K59-A71	·····	-	1	1	1	1	-		
	51400-K2V-N31	FORK ASSY., R. FR.·····	-	-	-	-	-	1		
2	51401-KZR-601	SPRING, FR. FORK(SHOWA)·····	2	2	2	2	2	-		
	51401-K0J-N01	SPRING, FR. FORK·····	-	-	-	-	-	2		
3	51410-KZL-A01	PIPE COMP., FR. FORK(SHOWA)··	2	2	2	2	2	-		
	51410-K0J-N01	PIPE COMP., FR. FORK·····	-	-	-	-	-	2		
4	51412-GN5-901	SPRING, REBOUND(SHOWA)·····	2	2	2	2	2	2		
5	51412-KWB-601	RING, BACK UP(SHOWA)·····	2	2	2	2	2	2		
6	51420-KZR-601	CASE, R. FR. BOTTOM(SHOWA)···	1	-	-	-	-	-		
	51420-K59-A71	CASE COMP., R. FR. BOTTOM····	-	1	1	1	1	-		
	51420-K81-N01	CASE COMP., R. FR. BOTTOM (SHOWA)	-	-	-	-	-	1		
7	51425-GN5-901	SEAL, DUST(SHOWA)·····	2	2	2	2	2	2		
8	51437-KWB-601	RING, PISTON(SHOWA)·····	2	2	2	2	2	2		
9	51454-KEV-881	SEAT B, SPRING(SHOWA)·····	2	2	2	2	2	-		
	51454-K58-TC1	SEAT B, SPRING·····	-	-	-	-	-	2		
10	51456-KPH-901	RING, STOPPER(SHOWA)·····	2	2	2	2	2	2		
11	51466-065-901	RING, OIL SEAL STOPPER(SHOWA)	2	2	2	2	2	2		
12	51470-KZR-601	PIPE, SEAT·····	2	-	-	-	-	-		
	51470-K81-N01	PIPE, SEAT(SHOWA)·····	-	2	2	2	2	-		
	51470-K2S-N01	PIPE, SEAT·····	-	-	-	-	-	2		
13	51490-KGH-901	SEAL SET, FR. FORK(SHOWA)····	2	2	2	2	2	2		
14	51500-KZR-601	FORK ASSY., L. FR.(SHOWA)····	1	-	-	-	-	-		
	51500-K59-A71	·····	-	1	1	1	1	-		
	51500-K2V-N31	FORK ASSY., L. FR.·····	-	-	-	-	-	1		
15	51520-KZR-601	CASE, L. FR. BOTTOM(SHOWA)···	1	-	-	-	-	-		

FRONT FORK

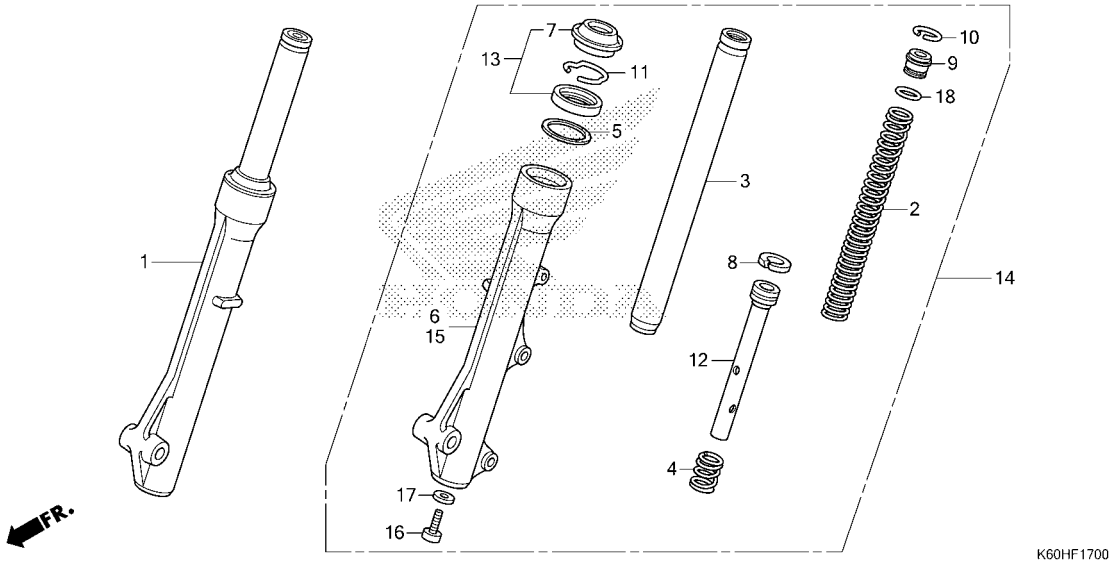

Ref. No.	Part No.	Description	Reqd. QTY ACB125CBF H	K	L	M	N	P	Serial No.	Parts catalogue code
15)	51520-K59-A71	CASE COMP., L. FR. BOTTOM····	-	1	1	1	1	-		
	51520-K81-N01	CASE COMP., L. FR. BOTTOM (SHOWA)	-	-	-	-	-	1		
16	90116-KV3-701	BOLT, SOCKET, 8MM(SHOWA)·····	2	2	2	2	2	2		
17	90544-283-000	WASHER, SPECIAL, 8MM(SHOWA)··	2	2	2	2	2	2		
18	91356-GM0-003	O-RING, 15.8X2.4(SHOWA)·····	2	2	2	2	2	-		
	91256-166-003	O-RING, 16.8X2.4·····	-	-	-	-	-	2		

F-18 FRONT BRAKE CALIPER(ACB125CBFH)

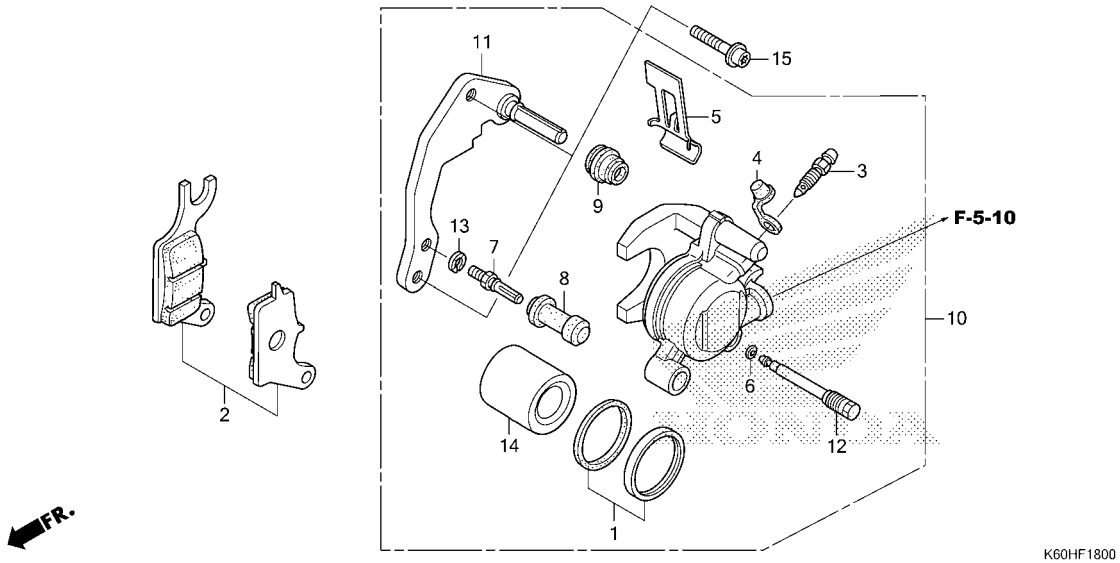

Ref. No.	Part No.	Description	Reqd. QTY ACB125CBF H	K	L	M	N	P	Serial No.	Parts catalogue code
1	06451-961-405	SEAL SET, PISTON	1	-	-	-	-	-		
2	06455-KVB-T01	PAD SET, FR. BRAKE	1	-	-	-	-	-		
3	43352-568-003	SCREW, BLEEDER(NISSIN)	1	-	-	-	-	-		
4	43353-461-771	CAP, BLEEDER	1	-	-	-	-	-		
5	45108-KVB-T01	SPRING, PAD	1	-	-	-	-	-		
6	45111-MAJ-G41	RING, STOPPER	1	-	-	-	-	-		
7	45131-GZ0-006	BOLT, PIN	1	-	-	-	-	-		
8	45132-166-016	BOOT, PIN BUSH(NISSIN)	1	-	-	-	-	-		
9	45133-MA3-006	BOOT B	1	-	-	-	-	-		
10	45150-KZL-A02	CALIPER SUB ASSY., L. FR. (NISSIN)	1	-	-	-	-	-		
11	45190-KZL-A01	BRACKET SUB ASSY., FR. CALIPER	1	-	-	-	-	-		
12	45215-KPH-951	PIN, HANGER	1	-	-	-	-	-		
13	45216-166-006	WASHER, WAVE	1	-	-	-	-	-		
14	45218-KWB-601	PISTON	1	-	-	-	-	-		
15	90131-KPH-880	BOLT, TORX, 8X25	2	-	-	-	-	-		

F-18-1 FRONT BRAKE CALIPER(ACB125CBFK/L/M/N/P)

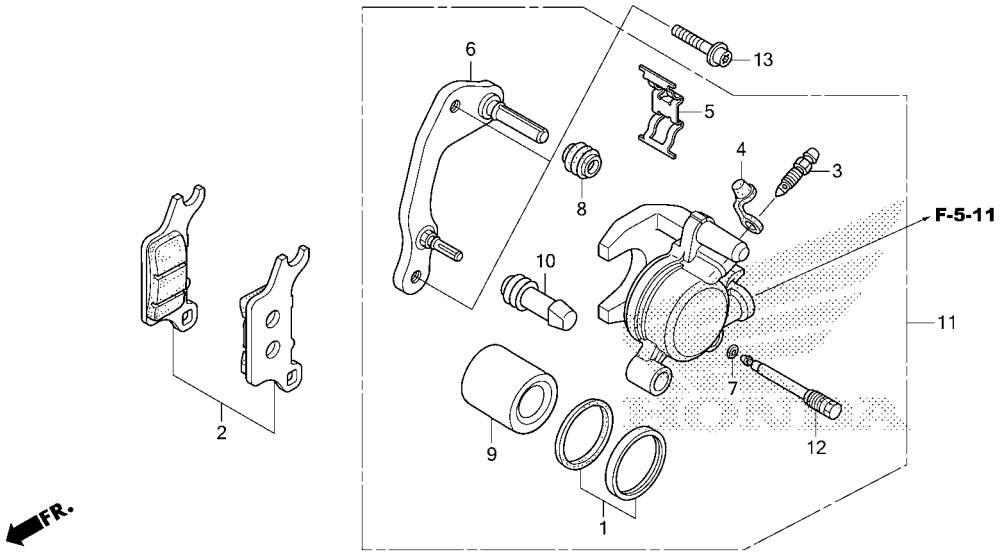

Ref. No.	Part No.	Description	Reqd. QTY ACB125CBF H	K	L	M	N	P	Serial No.	Parts catalogue code
1	06451-K59-A71	SEAL SET, PISTON	-	1	1	1	1	1		
2	06455-K59-A71	PAD SET, FR. BRAKE	-	1	1	1	1	1		
3	43352-K59-A71	SCREW, BLEEDER	-	1	1	1	1	1		
4	43353-K59-A71	CAP, BLEEDER	-	1	1	1	1	1		
5	45108-K59-A71	SPRING, PAD	-	1	1	1	1	-		
	45108-K2F-T01		-	-	-	-	-	1		
6	45110-K59-A71	BRACKET COMP., L. FR.	-	1	1	1	1	1		
7	45111-K59-A71	RING	-	1	1	1	1	1		
8	45113-K59-A71	BOOT	-	1	1	1	1	1		
9	45118-K59-A71	PISTON(34)	-	1	1	1	1	1		
10	45132-K59-A71	INSULATOR	-	1	1	1	1	1		
11	45150-K59-A71	CALIPER SUB ASSY., L. FR.	-	1	1	1	1	-		
	45150-K2S-N01		-	-	-	-	-	1		
12	45215-K59-A71	PIN, HANGER	-	1	1	1	1	1		
13	90131-KPH-880	BOLT, TORX, 8X25	-	2	2	2	2	2		

F-20-40 FRONT WHEEL(ACB125CBFH/K/L/M/N)

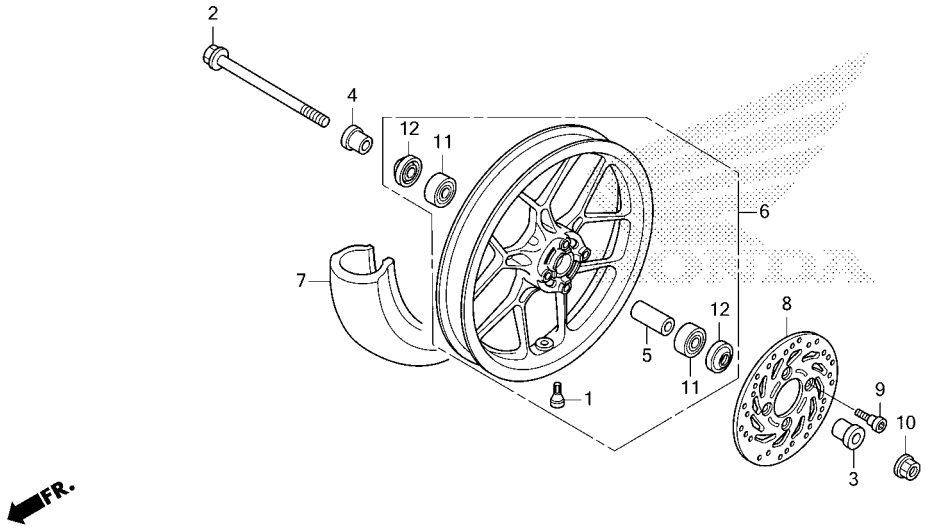

K60HF2040

Ref. No.	Part No.	Description	Reqd. QTY ACB125CBF H	K	L	M	N	P	Serial No.	Parts catalogue code
1	42753-GM9-743	VALVE, RIM(IRC)·····	1	1	1	1	1	-		
	42753-KWF-901	VALVE, RIM(TRITON)·····	1	1	1	1	1	-		
2	44301-KVG-950	AXLE, FR. WHEEL·····	1	1	1	1	1	-		
3	44311-KVB-910	COLLAR, FR. WHEEL SIDE·····	1	1	1	1	1	-		
4	44312-KZR-600	COLLAR, FR. WHEEL SIDE·····	1	1	1	1	1	-		
5	44620-KVB-910	COLLAR, FR. DISTANCE·····	1	1	1	1	1	-		
6	44650-K59-A10ZA	WHEEL SUB ASSY., FR. *NH303M* MAT AXIS GRAY METALLIC	1	1	1	1	1	-		
7	44711-K59-A12	TIRE, FR.(SRI) (80/90-14 M/C 40P)	1	1	1	1	1	-		
	44711-K59-A11	TIRE, FR.(IRC) (80/90-14 M/C 40P)	1	-	-	-	-	-		
8	45351-KVB-931	DISK, FR. BRAKE(YUTAKA)·····	1	1	1	1	1	-		
	45351-KVB-S02	DISK, FR. BRAKE(SUNSTAR)·····	1	1	1	1	1	-		
	45351-KVB-S01	DISK, FR. BRAKE(NHK PRECISION)	1	-	-	-	-	-		
	45351-KVY-961	DISK, FR. BRAKE(YUTAKA)·····	1	-	-	-	-	-		
	45351-KZR-C01	DISK, FR. BRAKE(ZHEJIANG)····	1	-	-	-	-	-		
	45351-K81-N31	DISK, FR. BRAKE(YUTAKA)·····	-	1	1	1	1	-		
	45351-K93-N01	DISK, FR. BRAKE(NHK)·····	-	1	1	1	1	-		
9	90105-KGH-900	BOLT, BRAKE DISK, 8X24·····	4	4	4	4	4	-		
10	90306-KGH-901	NUT, U, 12MM(FUJI SEIMITSU)··	1	1	1	1	1	-		
11	91052-K03-N41	BEARING, RADIAL BALL(6201U L) (SKF)	2	2	2	2	2	-		
	91052-K24-901	BEARING, RADIAL BALL(6201U L) (NSK)	2	2	2	2	2	-		

F-20-40 FRONT WHEEL(ACB125CBFH/K/L/M/N)

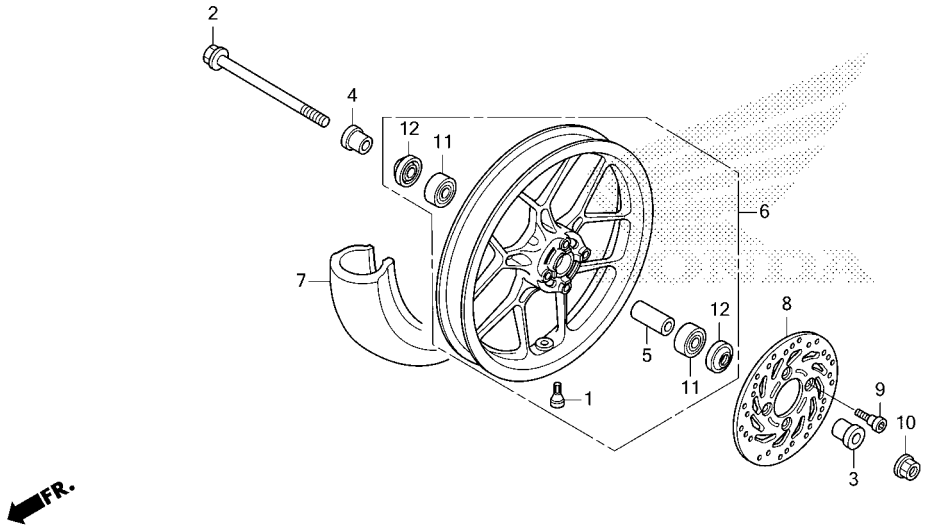

K60HF2040

Ref. No.	Part No.	Description	Reqd. QTY ACB125CBF H	K	L	M	N	P	Serial No.	Parts catalogue code
11)	91052-K24-902	BEARING, RADIAL BALL(6201U L) (NTN)	2	2	2	2	2	-		
	91052-K24-903	BEARING, RADIAL BALL(6201U L) (FUJIKOSHI)	2	2	2	2	2	-		
	91052-K24-904	BEARING, RADIAL BALL(6201U L) (FAG)	2	2	2	2	2	-		
12	91251-KZR-601	DUST SEAL, 21X32X5(ARAI)·····	2	2	2	2	2	-		

F-20-41 FRONT WHEEL(ACB125CBFP)

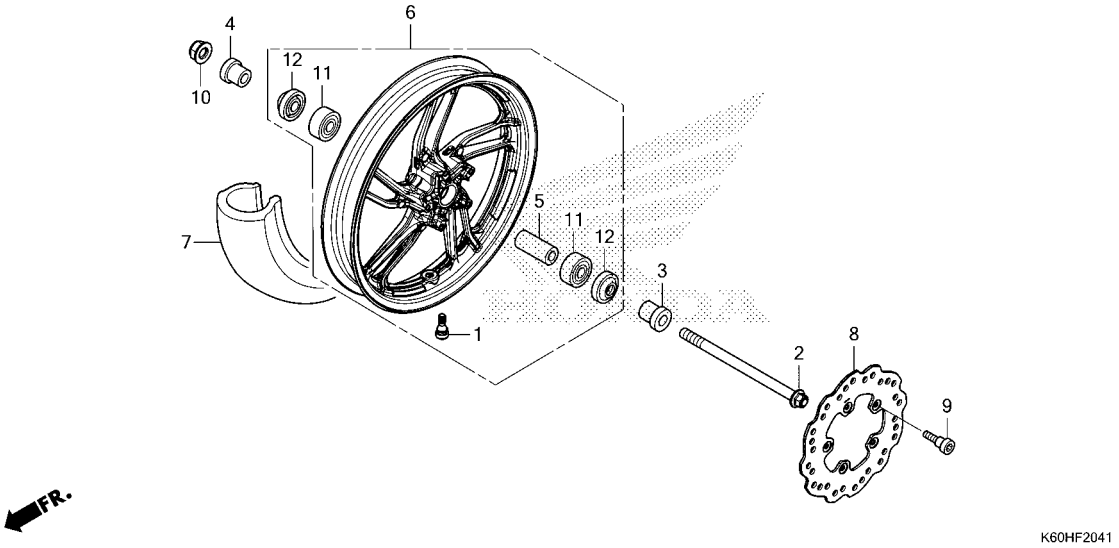

K60HF2041

Ref. No.	Part No.	Description	Reqd. QTY ACB125CBF H	K	L	M	N	P	Serial No.	Parts catalogue code
1	42753-GM9-743	VALVE, RIM(IRC)·····	-	-	-	-	-	1		
	42753-K2S-N01	VALVE, RIM(PACIFIC)·····	-	-	-	-	-	1		
	42753-KBS-901	VALVE, RIM(WONDER)·····	-	-	-	-	-	1		
	42753-KWF-901	VALVE, RIM(TRITON)·····	-	-	-	-	-	1		
2	44301-KVG-950	AXLE, FR. WHEEL·····	-	-	-	-	-	1		
3	44311-KVB-910	COLLAR, FR. WHEEL SIDE·····	-	-	-	-	-	1		
4	44312-KZR-600	COLLAR, FR. WHEEL SIDE·····	-	-	-	-	-	1		
5	44620-KVB-910	COLLAR, FR. DISTANCE·····	-	-	-	-	-	1		
6	44650-K2V-N30ZA	WHEEL SUB ASSY., FR. *NH303M* MAT AXIS GRAY METALLIC	-	-	-	-	-	1		
7	44711-K59-A71	TIRE, FR.(IRC) (90/80-14M/C 43P)	-	-	-	-	-	1		
	44711-K59-A72	TIRE, FR.(SRI) (90/80-14M/C 43P)	-	-	-	-	-	1		
8	45351-K2V-N31	DISK, FR. BRAKE·····	-	-	-	-	-	1		
	45351-K2V-N32	·····	-	-	-	-	-	1		
	45351-K59-A72	·····	-	-	-	-	-	1		
9	90105-KZZ-900	BOLT, DISK, 6X17·····	-	-	-	-	-	5		
10	90306-K66-V01	NUT, FLANGE, 12MM(PT)·····	-	-	-	-	-	1		
	90306-KGH-901	NUT, U, 12MM(FUJI SEIMITSU)··	-	-	-	-	-	1		
11	91052-K03-N41	BEARING, RADIAL BALL(6201U L) (SKF)	-	-	-	-	-	2		
	91052-K24-901	BEARING, RADIAL BALL(6201U L) (NSK)	-	-	-	-	-	2		
	91052-K24-902	BEARING, RADIAL BALL(6201U L) (NTN)	-	-	-	-	-	2		

F-20-41 FRONT WHEEL(ACB125CBFP)

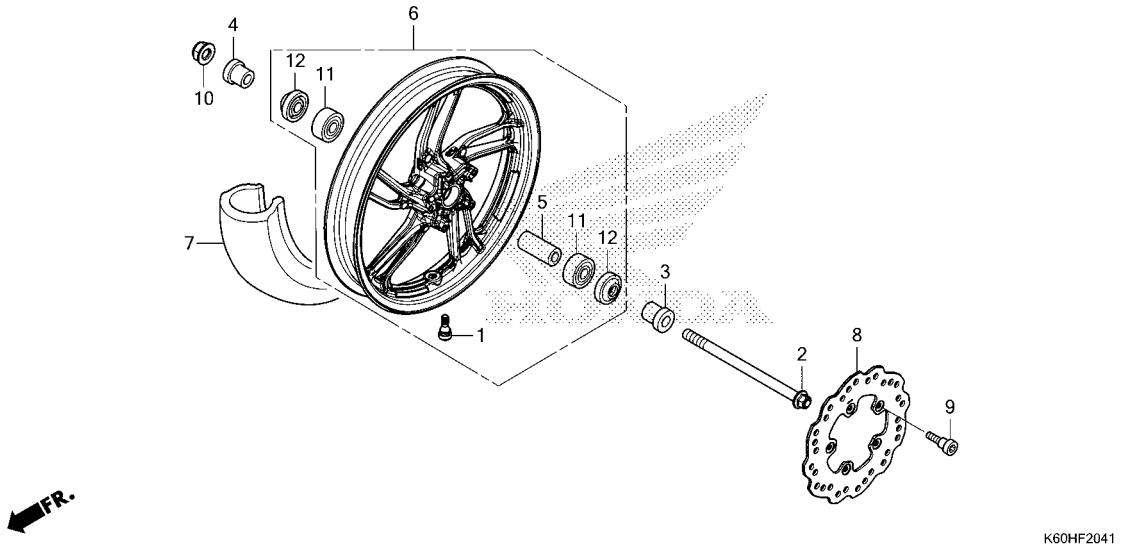

Ref. No.	Part No.	Description	Reqd. QTY ACB125CBF H	K	L	M	N	P	Serial No.	Parts catalogue code
11)	91052-K24-903	BEARING, RADIAL BALL(6201U L) (FUJIKOSHI)	-	-	-	-	-	2		
	91052-K24-904	BEARING, RADIAL BALL(6201U L) (FAG)	-	-	-	-	-	2		
12	91251-KZR-601	DUST SEAL, 21X32X5(ARAI)·····	-	-	-	-	-	2		

3

F-22-30 REAR WHEEL

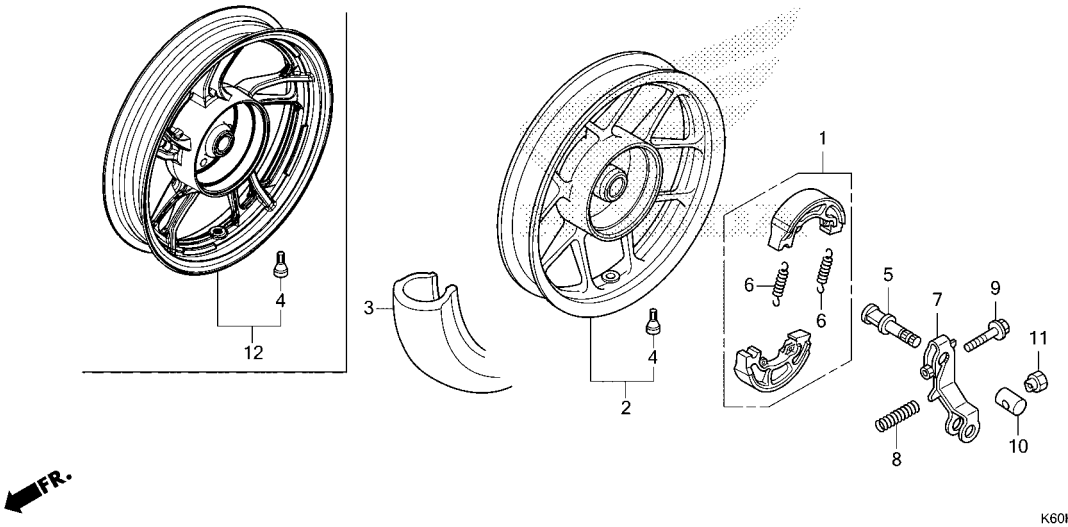

Ref. No.	Part No.	Description	Reqd. QTY ACB125CBF H	K	L	M	N	P	Serial No.	Parts catalogue code
1	06430-KWN-900	SHOE SET, BRAKE(JB)·····	1	1	1	1	1	1		
	06430-KZL-930	SHOE SET, BRAKE(ASK)·····	1	1	1	1	1	1		
	06430-K44-V80	SHOE SET, BRAKE(NK)·····	-	-	-	-	-	1		
2	42650-K59-A10ZA	WHEEL SUB ASSY., RR. *NH303M* MAT AXIS GRAY METALLIC	1	1	1	1	1	-		
3	42711-K59-A12	TIRE, RR.(SRI) (90/90-14 M/C 46P)	1	1	1	1	1	-		
	42711-K59-A11	TIRE, RR.(IRC) (90/90-14 M/C 46P)	1	-	-	-	-	-		
	42711-K59-A71	TIRE, RR.(IRC) (100/80-14M/C 48P)	-	-	-	-	-	1		
	42711-K59-A72	TIRE, RR.(SRI) (100/80-14M/C 48P)	-	-	-	-	-	1		
4	42753-GM9-743	VALVE, RIM(IRC)·····	1	1	1	1	1	1		
	42753-KWF-901	VALVE, RIM(TRITON)·····	1	1	1	1	1	1		
	42753-K2S-N01	VALVE, RIM(PACIFIC)·····	-	-	-	-	-	1		
	42753-KBS-901	VALVE, RIM(WONDER)·····	-	-	-	-	-	1		
5	43141-KZR-600	CAM, RR. BRAKE·····	1	1	1	1	1	1		
6	43151-329-000	SPRING, BRAKE SHOE·····	2	2	2	2	2	2		
7	43410-KWN-900	ARM, RR. BRAKE·····	1	1	1	1	1	1		
8	43472-KVB-900	SPRING, RR. BRAKE ARM·····	1	1	1	1	1	1		
9	90112-KVB-900	BOLT, FLANGE, 6X32·····	1	1	1	1	1	1		
10	95015-32001	JOINT B, BRAKE ARM·····	1	1	1	1	1	1		
11	95015-42000	NUT B, BRAKE ROD ADJUSTING···	1	1	1	1	1	-		
	43459-GN5-760	NUT, BRAKE ROD ADJUSTING·····	-	-	-	-	-	1		

REAR WHEEL

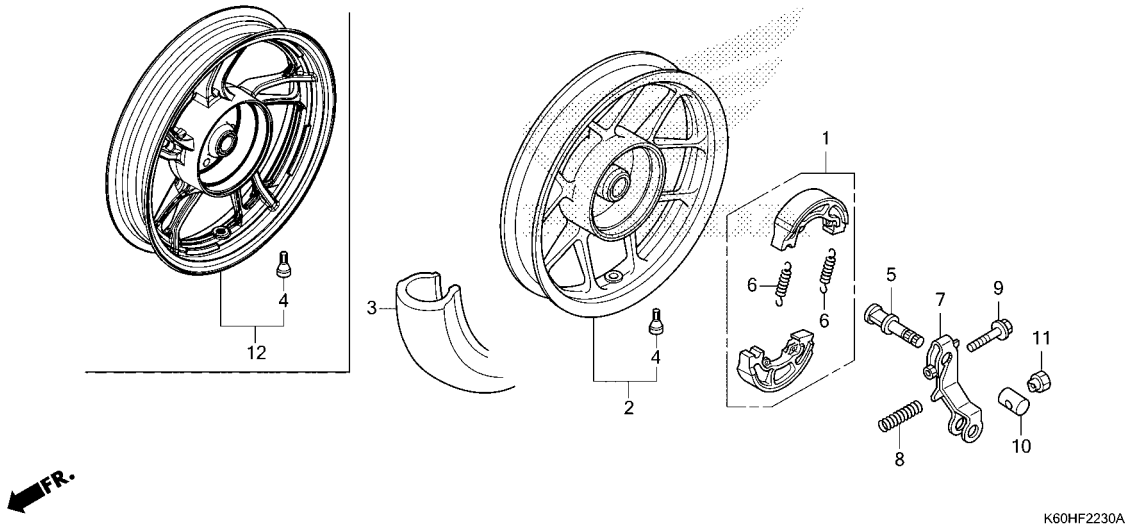

Ref. No.	Part No.	Description	Reqd. QTY ACB125CBF H	K	L	M	N	P	Serial No.	Parts catalogue code
12	42650-K2V-N30ZA	WHEEL SUB ASSY., RR. *NH303M* MAT AXIS GRAY METALLIC	-	-	-	-	-	1		

F-23 SWINGARM

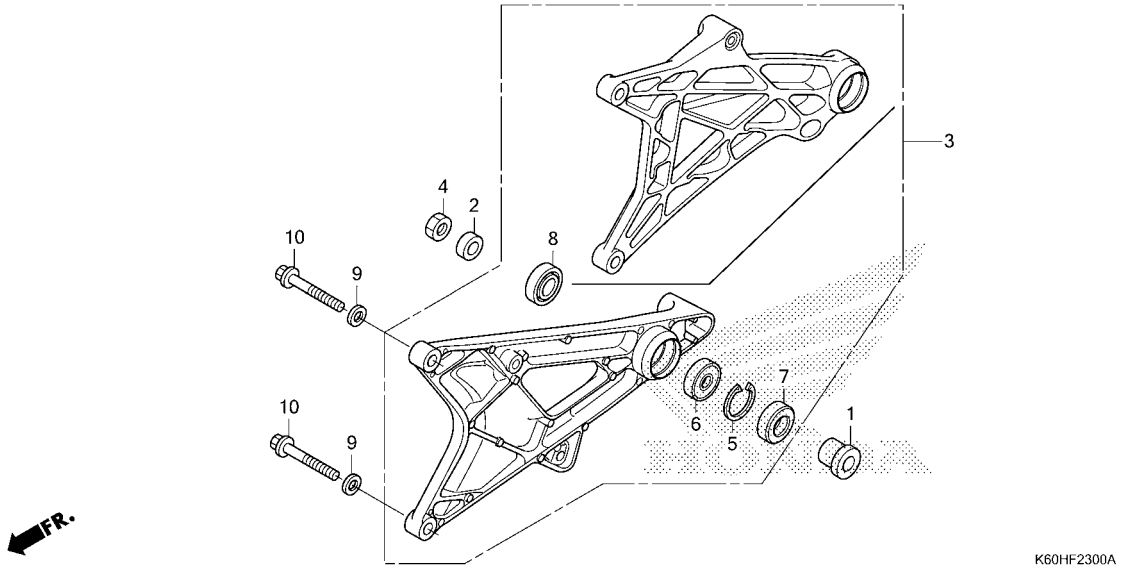

Ref. No.	Part No.	Description	Reqd. QTY ACB125CBF H	K	L	M	N	P	Serial No.	Parts catalogue code
1	42311-KWN-900	COLLAR, RR. WHEEL SIDE	1	1	1	1	1	1		
2	42312-KVG-900	COLLAR B, RR. WHEEL SIDE	1	1	1	1	1	1		
3	52100-KZR-C00	SWINGARM ASSY.	1	-	-	-	-	-		
	52100-K59-A70		-	1	1	1	1	1		
4	90305-KVB-901	NUT, U, 16MM	1	1	1	1	1	1		
	90305-K66-V01	NUT, HEX., 16MM	-	-	-	-	-	1		
5	90651-KZR-601	CIRCLIP, INTERNAL, 40MM	1	1	1	1	1	1		
	94520-40000		1	1	1	1	1	1		
6	91051-K35-V01	BEARING, RADIAL BALL, 6203UU L (NSK)	1	1	1	1	1	1		
	91051-K35-V02	BEARING, RADIAL BALL, 6203UU L (NTN)	1	1	1	1	1	1		
	91051-K35-V03	BEARING, RADIAL BALL, 6203UU L (FUJIKOSHI)	1	1	1	1	1	1		
	91051-K35-V04	BEARING, RADIAL BALL, 6203UU (FAG)	1	1	1	1	1	1		
7	91252-KZR-601	DUST SEAL, 25X40X5	1	1	1	1	1	1		
8	91253-KZR-601	DUST SEAL, 25X35X6	1	1	1	1	1	1		
9	94101-10000	WASHER, PLAIN, 10MM	2	2	2	2	2	2		
10	95701-10040-00	BOLT, FLANGE, 10X40	2	2	2	2	2	2		

SEAT/LUGGAGE BOX

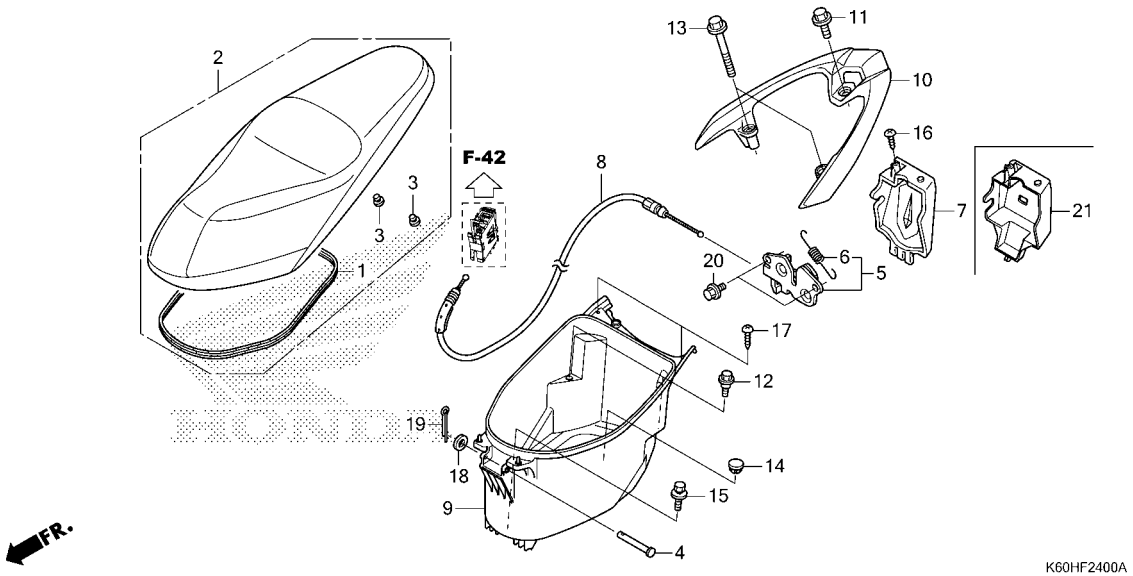

Ref. No.	Part No.	Description	Reqd. QTY ACB125CBF H	K	L	M	N	P	Serial No.	Parts catalogue code
1	77115-KZR-600	RUBBER, SEAL	1	-	-	-	-	-		
	77115-K59-A70		-	1	1	1	1	1		
2	77200-K59-A10	SEAT COMP., DOUBLE	1	-	-	-	-	-		
	77200-K59-A30		1	-	-	-	-	-		
	77200-K59-A70		-	1	1	1	1	1		
	77200-K59-H10		-	1	1	1	1	1		
3	77215-KW7-900	RUBBER C, SEAT SETTING	2	2	2	2	2	2		
4	77215-KZL-930	PIN, SEAT HINGE	1	1	1	1	1	1		
5	77230-K59-A10	LOCK COMP., SEAT	1	1	1	1	1	1		
6	77234-KYZ-900	SPRING, SEAT LOCK	1	1	1	1	1	1		
7	77237-K59-A10	COVER, SEAT CATCH	1	-	-	-	-	-		
8	77240-K59-A11	CABLE COMP., SEAT LOCK(HI-LEX)	1	1	1	1	1	1		
	77240-K59-A12	CABLE COMP., SEAT LOCK	1	1	1	1	1	1		
9	81250-K59-A10	BOX, LUGGAGE	1	-	-	-	-	-		
	81250-K59-A70		-	1	1	1	1	1		
10	84100-K59-A10ZE	RAIL, RR. GRAB *NH303M* MAT AXIS GRAY METALLIC	1	-	-	-	-	-		
	84100-K59-A70ZJ	*NH229MU* ANCHOR GRAY METALLIC-U	-	1	-	-	-	-		
	84100-K59-A70ZK	*NHB12M* AFFINITY BLACK METALLIC	-	1	-	-	-	-		
	84100-K59-A70ZH	*NH303M* MAT AXIS GRAY METALLIC	-	-	1	1	1	1		
11	90103-KEZ-900	BOLT, SPECIAL FLANGE, 8X20	1	1	1	1	1	1		
12	90111-162-000	BOLT, FLANGE, 6MM	2	2	2	2	2	2		
13	90161-KZR-600	BOLT, SPECIAL FLANGE, 8X60	2	2	2	2	2	2		

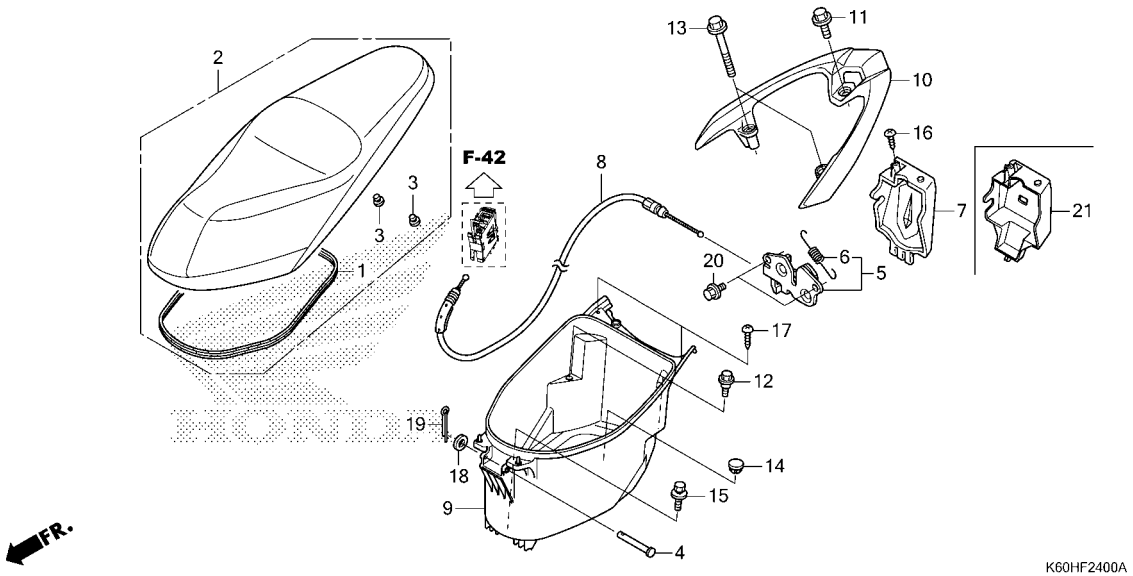

Ref. No.	Part No.	Description	Reqd. QTY ACB125CBF H	K	L	M	N	P	Serial No.	Parts catalogue code
14	90656-GCC-000ZE	PLUG, HOLE								
		TBLACK.....BLACK	1	1	1	1	1	1		
15	93404-06012-00	BOLT-WASHER, 6X12	1	1	1	1	1	1		
16	93903-24310	SCREW, TAPPING, 4X12	1	1	1	1	1	-		
	93903-24380		-	-	-	-	-	1		
17	93903-24480	SCREW, TAPPING, 4X16	2	2	2	2	2	2		
18	94101-08000	WASHER, PLAIN, 8MM	1	1	1	1	1	1		
19	94201-16180	PIN, SPLIT, 1.6X18	1	1	1	1	1	1		
20	95701-06012-00	BOLT, FLANGE, 6X12	2	2	2	2	2	2		
21	77237-K59-A70	COVER, SEAT CATCH	-	1	1	1	1	1		

F-26 FUEL TANK(ACB125CBFH)

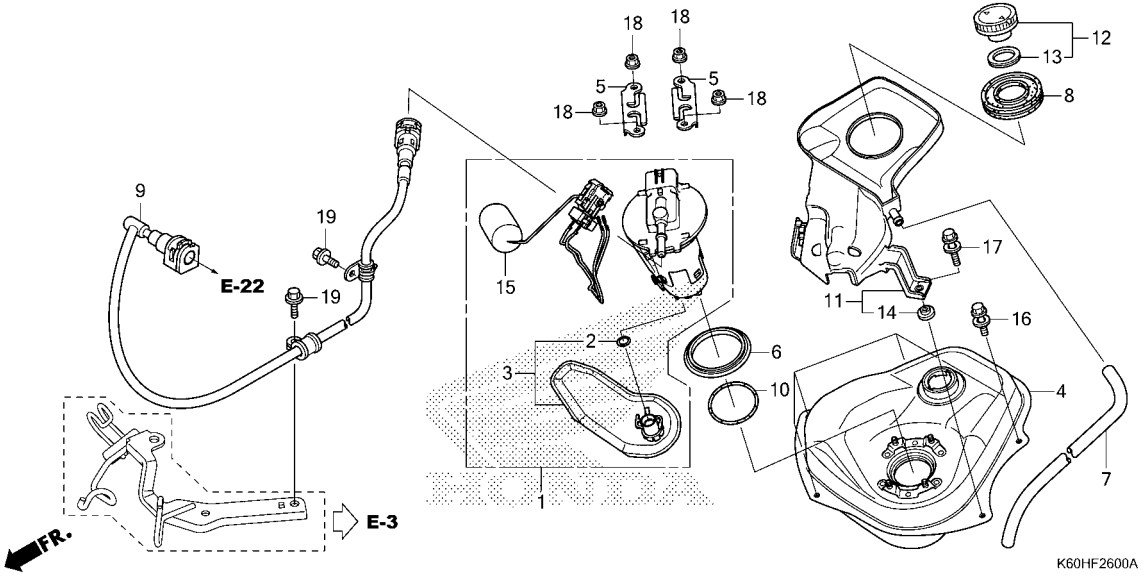

Ref. No.	Part No.	Description	Reqd. QTY ACB125CBF H	K	L	M	N	P	Serial No.	Parts catalogue code
1	16700-K60-B21	PUMP UNIT, FUEL	1	-	-	-	-	-		
2	16706-K81-N01	O-RING(P7)	1	-	-	-	-	-		
	16706-KVB-S51		1	-	-	-	-	-		
3	16707-KZR-601	FILTER SET	1	-	-	-	-	-		
4	17510-K59-A10	TANK COMP., FUEL	1	-	-	-	-	-		
5	17517-GGL-J00	RETAINER, FUEL PUMP	2	-	-	-	-	-		
6	17518-GHB-601	SEAL, DUST(OHTUKA POLY-TECH)	1	-	-	-	-	-		
	17518-GHB-602	SEAL, DUST (PT. CATURINDO AGUNG JAYA RUB)	1	-	-	-	-	-		
7	17526-K59-A10	TUBE, DRAIN	1	-	-	-	-	-		
8	17527-KZR-600	RUBBER, FUEL SEAL	1	-	-	-	-	-		
9	17570-K60-B01	HOSE COMP., FUEL FEED	1	-	-	-	-	-		
10	17572-GHB-601	O-RING, FUEL PUMP(ARAI)	1	-	-	-	-	-		
	17572-GHB-602	O-RING, FUEL PUMP (PT. INDOKARLO PERKASA)	1	-	-	-	-	-		
11	17575-K59-A10	COVER, FUEL PUMP	1	-	-	-	-	-		
12	17620-KGH-600	CAP, FUEL FILLER	1	-	-	-	-	-		
13	17631-KEV-900	PACKING, FUEL FILLER CAP	1	-	-	-	-	-		
14	18316-K50-T00	COLLAR, MUFFLER PROTECTOR	1	-	-	-	-	-		
15	37800-K60-B21	FUEL UNIT	1	-	-	-	-	-		
16	93404-06012-00	BOLT-WASHER, 6X12	4	-	-	-	-	-		
17	93404-06016-00	BOLT-WASHER, 6X16	1	-	-	-	-	-		
18	94050-06000	NUT, FLANGE, 6MM	4	-	-	-	-	-		
19	95701-06012-00	BOLT, FLANGE, 6X12	2	-	-	-	-	-		

F-26-1 FUEL TANK(ACB125CBFK/L/M/N/P)

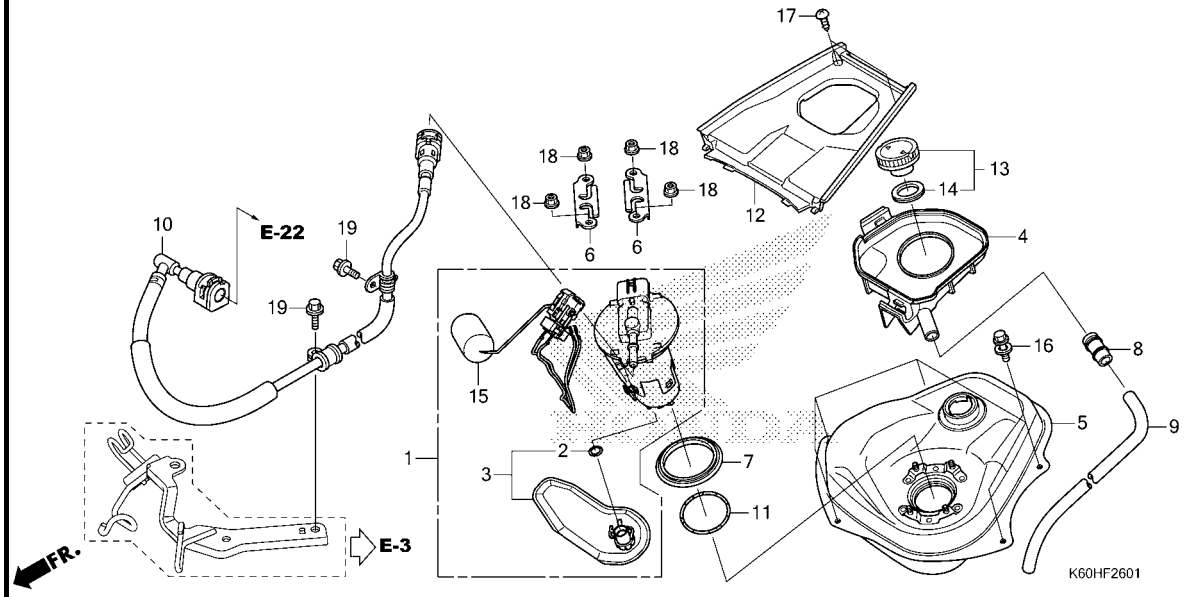

Ref. No.	Part No.	Description	Reqd. QTY ACB125CBF H	K	L	M	N	P	Serial No.	Parts catalogue code
1	16700-K60-B61	PUMP UNIT, FUEL	-	1	1	1	1	-		
	16700-K2V-N31		-	-	-	-	-	1		
2	16706-K81-N01	O-RING(P7)	-	1	1	1	1	-		
	16706-KVB-S51		-	1	1	1	1	-		
	16706-K0J-N01	O-RING(P5)	-	-	-	-	-	1		
3	16707-KZR-601	FILTER SET	-	1	1	1	1	-		
	16707-K0J-N01		-	-	-	-	-	1		
4	17505-K59-A70	TRAY, FUEL	-	1	1	1	1	1		
5	17510-K59-A10	TANK COMP., FUEL	-	1	1	1	1	1		
6	17517-GGL-J00	RETAINER, FUEL PUMP	-	2	2	2	2	2		
7	17518-GHB-601	SEAL, DUST(OHTUKA POLY-TECH)	-	1	1	1	1	1		
	17518-GHB-602	SEAL, DUST (PT. CATURINDO AGUNG JAYA RUB)	-	1	1	1	1	1		
8	17525-KBN-900	JOINT, FUEL TUBE	-	1	1	1	1	1		
9	17526-K59-T10	TUBE, DRAIN	-	1	1	1	1	1		
10	17570-K60-B71	HOSE COMP., FUEL FEED	-	1	1	1	1	1		
11	17572-GHB-601	O-RING, FUEL PUMP(ARAI)	-	1	1	1	1	1		
	17572-GHB-602	O-RING, FUEL PUMP (PT. INDOKARLO PERKASA)	-	1	1	1	1	1		
12	17575-K59-A70	COVER, FUEL TANK	-	1	1	1	1	1		
13	17620-K29-J00	CAP COMP., FUEL FILLER	-	1	1	-	-	-		
	17620-K29-J03		-	-	-	1	1	1		
14	17632-383-831	PACKING, FUEL FILLER CAP	-	1	1	-	-	-		
	17632-383-832		-	-	-	1	1	1		
15	37800-K60-B61	FUEL UNIT	-	1	1	1	1	1		
16	93404-06012-00	BOLT-WASHER, 6X12	-	5	5	5	5	5		

F-26-1 FUEL TANK(ACB125CBFK/L/M/N/P)

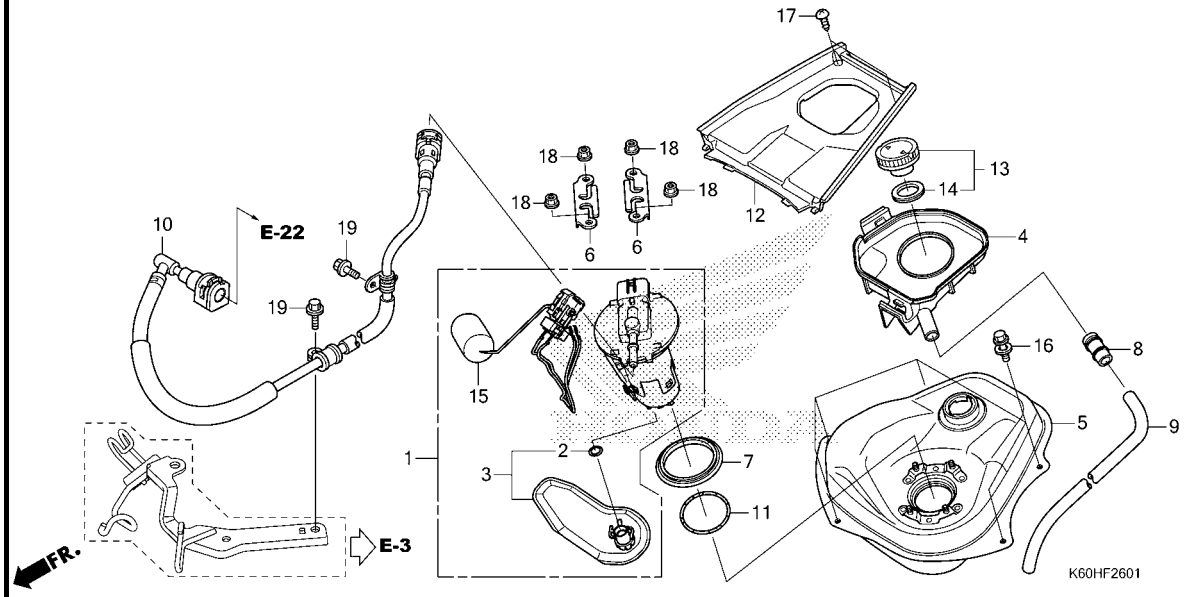

Ref. No.	Part No.	Description	Reqd. QTY ACB125CBF H	K	L	M	N	P	Serial No.	Parts catalogue code
17	93903-24480	SCREW, TAPPING, 4X16	-	2	2	2	2	2		
18	94050-06000	NUT, FLANGE, 6MM	-	4	4	4	4	4		
19	95701-06012-00	BOLT, FLANGE, 6X12	-	2	2	2	2	2		

F-28 AIR CLEANER

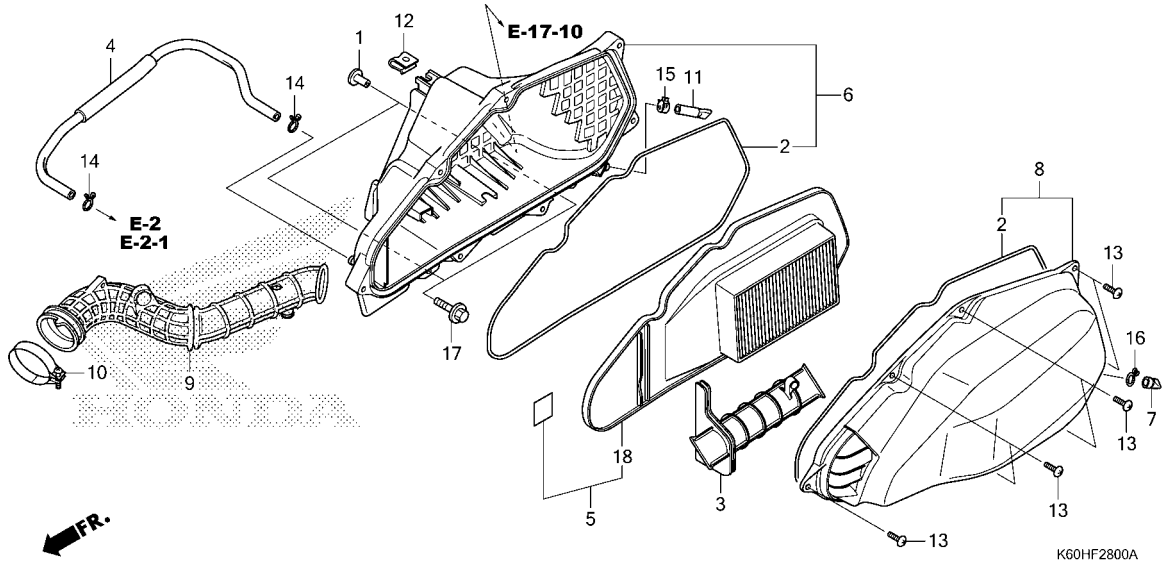

Ref. No.	Part No.	Description	Reqd. QTY ACB125CBF H	K	L	M	N	P	Serial No.	Parts catalogue code
1	17208-GR1-010	COLLAR, AIR CLEANER SETTING··	2	2	2	2	2	2		
2	17213-KZR-600	SEAL, AIR CLEANER·····	2	2	2	2	2	2		
3	17215-KWN-980	DUCT, AIR CLEANER·····	1	1	1	1	1	1		
4	17218-K59-A10	TUBE, BREATHER·····	1	1	1	1	1	1		
5	17220-K59-A10	ELEMENT SET, AIR CLEANER(WL)·	1	-	-	-	-	-		
	17220-K2V-N30	·····	-	-	-	-	-	1		
6	17225-KWN-980	CASE SUB ASSY., AIR CLEANER··	1	1	1	1	1	1		
7	17234-KCW-871	TUBE, AIR CLEANER DRAIN·····	1	-	-	-	-	-		
	17236-KVB-900	PLUG, AIR CLEANER DRAIN·····	-	1	1	1	1	1		
8	17245-KZR-600	COVER SUB ASSY., AIR CLEANER·	1	1	1	1	1	1		
9	17253-K60-B00	TUBE, AIR CLEANER CONNECTING·	1	1	1	1	1	1		
10	17256-KWZ-900	BAND, AIR CLEANER CONNECTING TUBE(44)	1	1	1	1	1	1		
11	17261-KVB-T00	TUBE, DRAIN·····	1	1	1	1	1	1		
12	90305-GEE-710	NUT, CLIP, 6MM·····	1	1	1	1	1	1		
13	93903-25480	SCREW, TAPPING, 5X20·····	7	7	7	7	7	7		
14	95002-02130	CLIP, TUBE(B12.5)·····	2	2	2	2	2	2		
15	95002-41200-08	CLAMP, TUBE(D12)·····	1	1	1	1	1	1		
16	95002-80000	CLIP, TUBE(C12)·····	1	1	1	1	1	1		
17	95701-06025-00	BOLT, FLANGE, 6X25·····	2	2	2	2	2	2		
18	17210-K60-B60	ELEMENT COMP., AIR CLEANER (WOL)	-	1	1	1	1	-		

F-30 EXHAUST MUFFLER(ACB125CBFH)

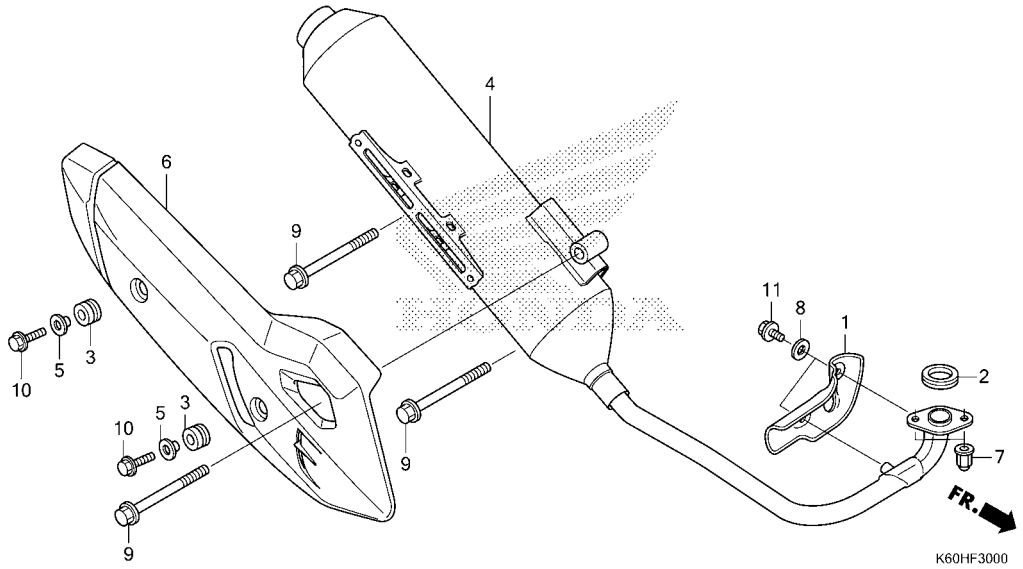

Ref. No.	Part No.	Description	Reqd. QTY ACB125CBF H	K	L	M	N	P	Serial No.	Parts catalogue code
1	18240-K59-A10	PLATE, HEAT GUARD	1	-	-	-	-	-		
2	18291-GE2-921	GASKET, EX. PIPE	1	-	-	-	-	-		
3	18293-KSB-900	RUBBER, PROTECTOR PACKING	2	-	-	-	-	-		
4	18300-K60-B00	MUFFLER COMP., EX.	1	-	-	-	-	-		
5	18316-KVB-900	COLLAR, MUFFLER PROTECTOR	2	-	-	-	-	-		
6	18318-K59-A10	PROTECTOR, MUFFLER	1	-	-	-	-	-		
7	90304-MJ0-920	NUT, CAP, 7MM	2	-	-	-	-	-		
8	94101-06000	WASHER, PLAIN, 6MM	2	-	-	-	-	-		
9	95701-10065-07	BOLT, FLANGE, 10X65	3	-	-	-	-	-		
10	95801-06016-02	BOLT, FLANGE, 6X16	2	-	-	-	-	-		
11	96001-06008-00	BOLT, FLANGE, 6X8	2	-	-	-	-	-		

F-30-1 EXHAUST MUFFLER(ACB125CBFK/L/M/N/P)

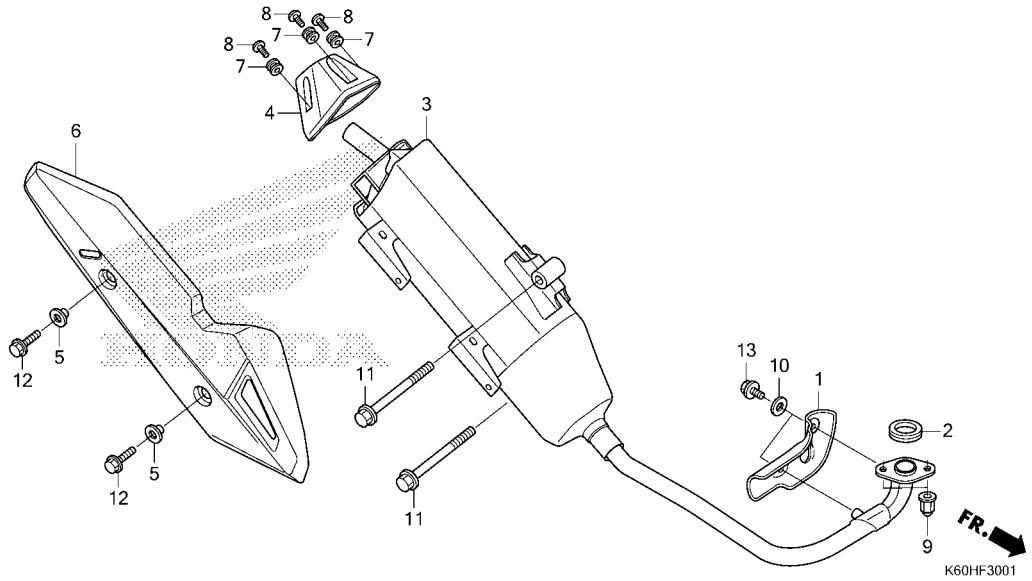

Ref. No.	Part No.	Description	Reqd. QTY ACB125CBF H	K	L	M	N	P	Serial No.	Parts catalogue code
1	18240-K59-A10	PLATE, HEAT GUARD	-	1	1	1	1	1		
2	18291-GE2-921	GASKET, EX. PIPE	-	1	1	1	1	1		
3	18300-K60-B60	MUFFLER COMP., EX.	-	1	1	1	1	-		
	18300-K2V-N30		-	-	-	-	-	1		
4	18306-K59-A70ZA	CAP, TAIL *NH167MU* IRON NAIL SILVER METALLIC-U	-	1	1	1	1	1		
5	18316-K50-T00	COLLAR, MUFFLER PROTECTOR	-	2	2	2	2	2		
6	18318-K59-A70	PROTECTOR, MUFFLER	-	1	1	1	1	1		
7	18345-K15-920	RUBBER, MOUNTING	-	3	3	3	3	3		
8	90113-K15-920	SCREW, PAN, 6X14	-	3	3	3	3	3		
9	90304-MJ0-920	NUT, CAP, 7MM	-	2	2	2	2	2		
10	94101-06000	WASHER, PLAIN, 6MM	-	2	2	2	2	2		
11	95701-10065-07	BOLT, FLANGE, 10X65	-	2	2	2	2	2		
12	95801-06016-02	BOLT, FLANGE, 6X16	-	2	2	2	2	2		
13	96001-06008-00	BOLT, FLANGE, 6X8	-	2	2	2	2	2		

F-35 STAND/KICK STARTER ARM

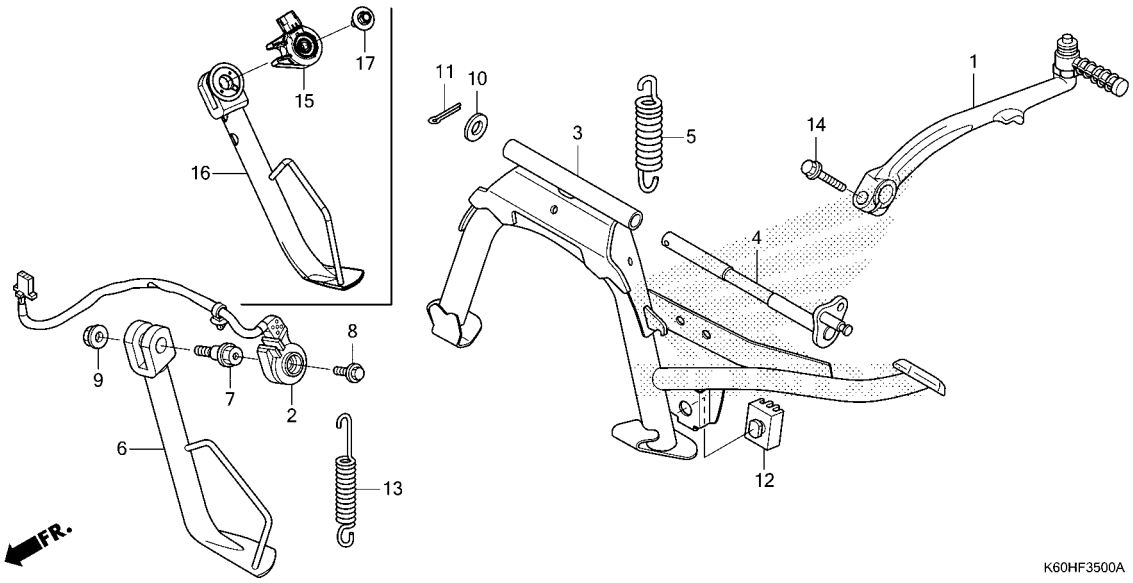

Ref. No.	Part No.	Description	Reqd. QTY ACB125CBF H	K	L	M	N	P	Serial No.	Parts catalogue code
1	28300-KZR-600	ARM ASSY., KICK STARTER	1	-	-	-	-	-		
2	35700-K59-A11	SWITCH ASSY., SIDE STAND	1	1	1	1	1	-		
3	50500-K59-A10	STAND COMP., MAIN	1	1	1	1	1	1		
4	50503-KWN-900	SHAFT, MAIN STAND	1	1	1	1	1	1		
5	50520-KVB-900	SPRING, MAIN STAND	1	1	1	1	1	1		
6	50530-K59-A10	BAR COMP., SIDE STAND	1	-	-	-	-	-		
	50530-K59-A70		-	1	1	1	1	-		
7	90108-KZL-860	BOLT, SIDE STAND PIVOT	1	1	1	1	1	1		
8	90147-KVY-900	BOLT, SWITCH SETTING	1	1	1	1	1	-		
9	90203-KVB-900	NUT, SIDE STAND	1	1	1	1	1	1		
10	94101-10800	WASHER, PLAIN, 10MM	1	1	1	1	1	1		
11	94201-30200	PIN, SPLIT, 3.0X20	1	1	1	1	1	1		
12	95011-61000	RUBBER A, STAND STOPPER	1	1	1	1	1	1		
13	95014-72102	SPRING A, SIDE STAND	1	1	1	1	1	1		
14	95701-08025-00	BOLT, FLANGE, 8X25	1	-	-	-	-	-		
15	35700-K0J-N01	SWITCH ASSY., SIDE STAND (ALPS ALPINE)	-	-	-	-	-	1		
	35700-K1A-N01	SWITCH ASSY., SIDE STAND (PANASONIC)	-	-	-	-	-	1		
16	50530-K2V-N30	BAR COMP., SIDE STAND	-	-	-	-	-	1		
17	90147-KVB-900	BOLT, SPECIAL, 6X16	-	-	-	-	-	1		

REAR CUSHION

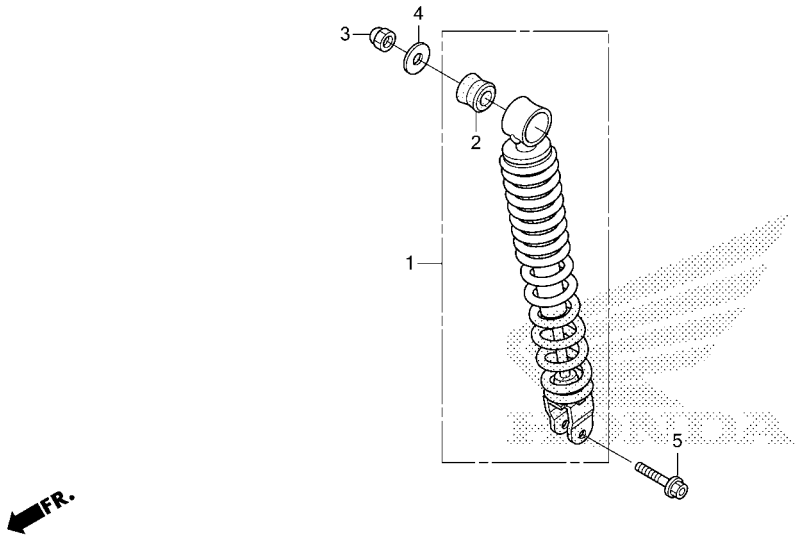

K60HF3600

Ref. No.	Part No.	Description	Reqd. QTY ACB125CBF H	K	L	M	N	P	Serial No.	Parts catalogue code
1	52400-K59-A11	CUSHION ASSY., RR.	1	1	1	1	1	1		
2	52485-KVY-901	BUSH, RUBBER(SHOWA)	1	1	1	1	1	1		
3	94021-10000-0S	NUT, CAP, 10MM	1	1	1	1	1	1		
4	94101-10000	WASHER, PLAIN, 10MM	1	1	1	1	1	1		
5	95801-08032-00	BOLT, FLANGE, 8X32	1	1	1	1	1	1		

WINKER

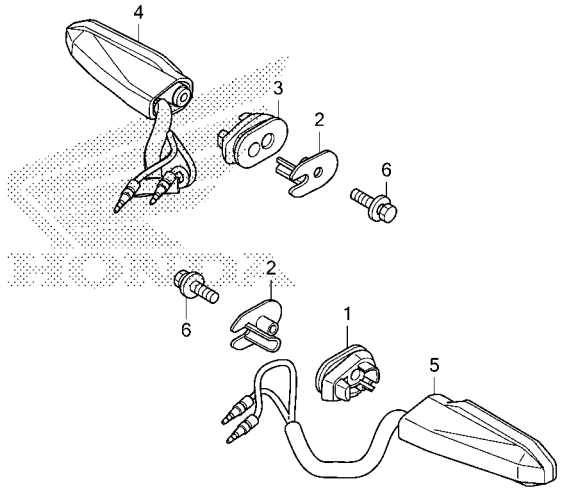

K60HF3700

Ref. No.	Part No.	Description	Reqd. QTY ACB125CBF H	K	L	M	N	P	Serial No.	Parts catalogue code
1	33412-KZZ-J00	RUBBER, R. WINKER MOUNTING (L. SIDE)	-	1	1	1	1	1		
2	33415-KZZ-J00	COLLAR, WINKER	-	2	2	2	2	2		
3	33452-KZZ-J00	RUBBER, L. WINKER MOUNTING (R. SIDE)	-	1	1	1	1	1		
4	33600-K59-A71	WINKER ASSY., R. RR.	-	1	1	1	1	1		
5	33650-K59-A71	WINKER ASSY., L. RR.	-	1	1	1	1	1		
6	93411-05025-00	BOLT-WASHER, 5X25	-	2	2	2	2	2		

TAILLIGHT

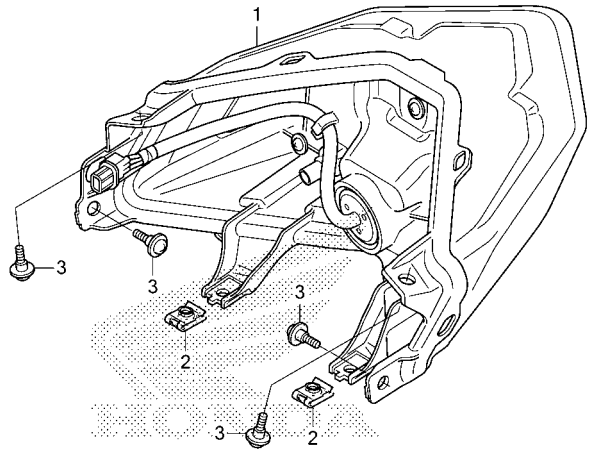

K60HF3800

Ref. No.	Part No.	Description	Reqd. QTY ACB125CBF H	K	L	M	N	P	Serial No.	Parts catalogue code
1	33701-K59-A71	TAILLIGHT ASSY.	-	1	1	1	1	1		
2	90677-KAN-T00	NUT, CLIP, 5MM	-	2	2	2	2	2		
3	91509-GE2-760	SCREW, PAN, 5X11.5	-	4	4	4	4	4		

F-38-10 REAR COMBINATION LIGHT

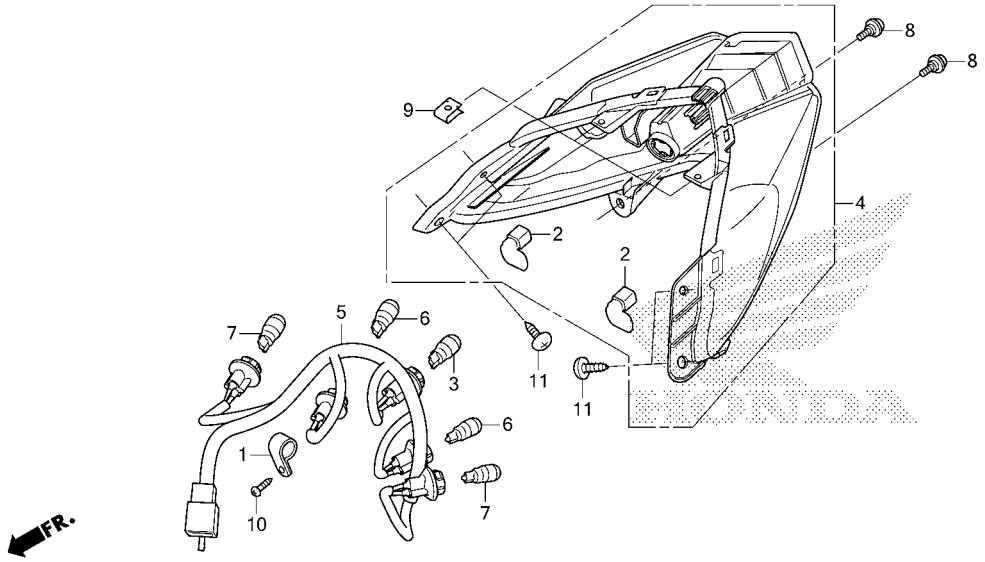

Ref. No.	Part No.	Description	Reqd. QTY ACB125CBF H	K	L	M	N	P	Serial No.	Parts catalogue code
1	32920-KZR-901	CLAMP, CORD	1	-	-	-	-	-		
2	33113-K20-901	PIPE, CP	2	-	-	-	-	-		
3	33301-K07-901	BULB, POSITION(12V 5W) (STANLEY)	1	-	-	-	-	-		
4	33710-K59-A11	BASE COMP., RR. COMBINATION	1	-	-	-	-	-		
5	33750-K59-A11	SOCKET COMP.	1	-	-	-	-	-		
6	34905-GM9-003	BULB, WINKER(12V 10W)(STANLEY) (BRAKE)	2	-	-	-	-	-		
7	34905-KAN-W01	BULB, WINKER(12V 10W)(AMBER) (STANLEY) (TURN)	2	-	-	-	-	-		
8	90117-KVG-A20	SCREW, PAN, 5X13	2	-	-	-	-	-		
9	90302-GW3-980	NUT, SPRING, 4MM	2	-	-	-	-	-		
10	93901-34310	SCREW, TAPPING, 4X12	1	-	-	-	-	-		
11	93903-25310	SCREW, TAPPING, 5X16	4	-	-	-	-	-		

F-39 REAR FENDER/LICENSE LIGHT(ACB125CBFH)

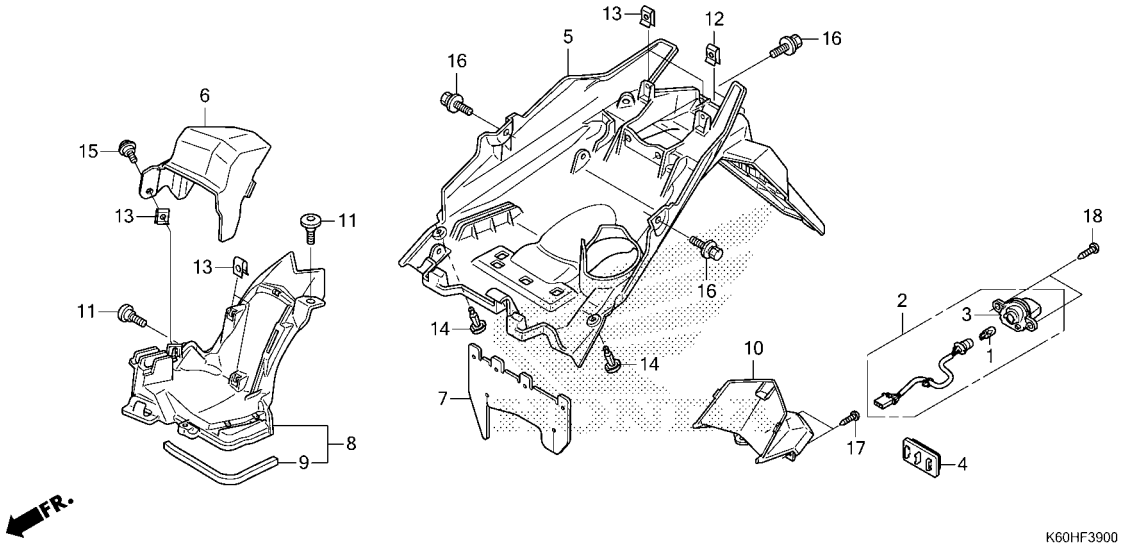

Ref. No.	Part No.	Description	Reqd. QTY ACB125CBF H	K	L	M	N	P	Serial No.	Parts catalogue code
1	33301-K07-901	BULB, POSITION(12V 5W) (STANLEY)	1	-	-	-	-	-		
2	33720-K59-A11	LIGHT ASSY., LICENSE	1	-	-	-	-	-		
3	33721-K59-A11	LIGHT COMP., LICENSE	1	-	-	-	-	-		
4	33741-KAN-961	REFLECTOR, RR. REFLEX(STANLEY)	1	-	-	-	-	-		
5	80100-K59-A10	FENDER, RR.	1	-	-	-	-	-		
6	80102-K59-A10	COVER, RESERVE TANK	1	-	-	-	-	-		
7	80104-K59-A10	GUARD, SPLASH	1	-	-	-	-	-		
8	80106-K59-A10	FENDER ASSY., RR. INNER	1	-	-	-	-	-		
9	80108-KZR-600	SEAL, RR. INNER FENDER	1	-	-	-	-	-		
10	80110-K59-A10ZA	BASE SET, LICENSE LIGHT(WL) *TYPE1*	1	-	-	-	-	-		
11	90001-KWR-000	BOLT, SOCKET, 6X18	2	-	-	-	-	-		
12	90302-KWW-A00	NUT, SPRING, 4MM	2	-	-	-	-	-		
13	90677-KAN-T00	NUT, CLIP, 5MM	5	-	-	-	-	-		
14	90683-GAZ-003	CLIP, TRIM	2	-	-	-	-	-		
15	91509-GE2-760	SCREW, PAN, 5X11.5	1	-	-	-	-	-		
16	93404-06012-00	BOLT-WASHER, 6X12	4	-	-	-	-	-		
17	93903-24380	SCREW, TAPPING, 4X12	2	-	-	-	-	-		
18	93903-25310	SCREW, TAPPING, 5X16	2	-	-	-	-	-		

F-39-1 REAR FENDER/LICENSE LIGHT(ACB125CBFK/L/M/N/P)

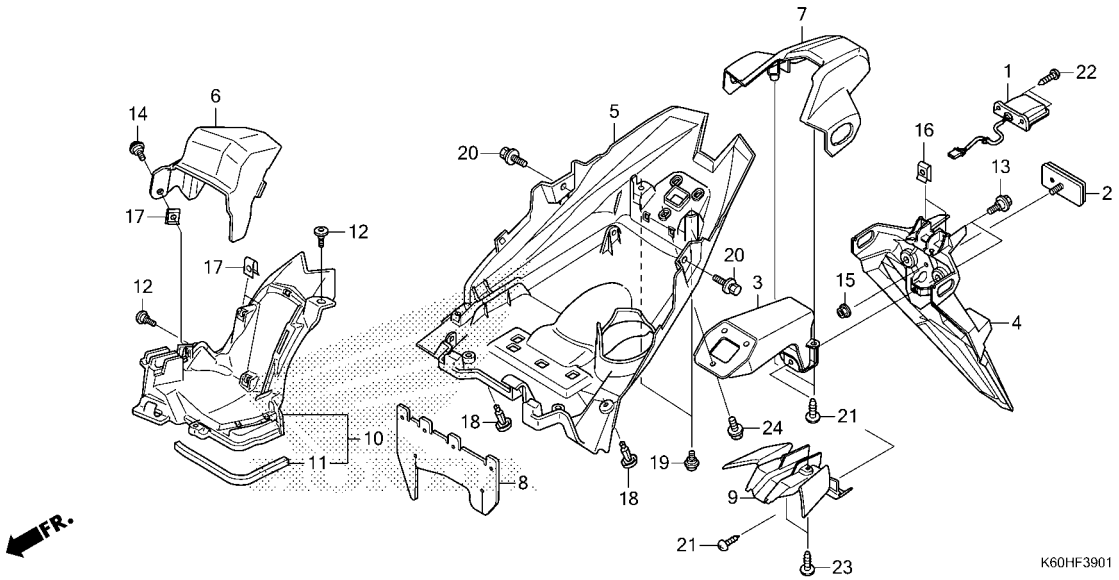

Ref. No.	Part No.	Description	Reqd. QTY ACB125CBF H	K	L	M	N	P	Serial No.	Parts catalogue code
1	33720-K59-A71	LIGHT ASSY., LICENSE(MITSUBA)	-	1	1	1	1	1		
2	33741-MS6-921	REFLECTOR, REFLEX(STANLEY)···	-	1	1	1	1	1		
3	50186-K59-A70ZA	BRACKET, RR. FENDER *NHA40M* MAT CRYPTON SILVER METALLIC	-	1	1	1	1	1		
4	80100-K59-T10ZA	FENDER SET A, RR.(WL) *TYPE1*.....	-	1	1	1	1	1		
5	80101-K59-A70	FENDER B, RR.···	-	1	1	1	1	1		
6	80102-K59-A10	COVER, RESERVE TANK···	-	1	1	1	1	1		
7	80103-K59-A70ZB	COVER, RR. FENDER UPPER *TBLACK*.....BLACK	-	1	1	1	1	1		
8	80104-K59-A10	GUARD, SPLASH···	-	1	1	1	1	1		
9	80104-K59-A70	COVER, RR. FENDER LOWER···	-	1	1	1	1	1		
10	80106-K59-A10	FENDER ASSY., RR. INNER···	-	1	1	1	1	1		
11	80108-KZR-600	SEAL, RR. INNER FENDER···	-	1	1	1	1	1		
12	90001-KWR-000	BOLT, SOCKET, 6X18···	-	2	2	2	2	2		
13	90116-KVB-900	BOLT, FLANGE, 6MM···	-	2	2	2	2	2		
14	90117-KVG-A20	SCREW, PAN, 5X13···	-	1	1	1	1	1		
15	90301-KWN-901	NUT, U, 5MM···	-	1	1	1	1	1		
16	90302-KWW-A00	NUT, SPRING, 4MM···	-	2	2	2	2	2		
17	90677-KAN-T00	NUT, CLIP, 5MM···	-	3	3	3	3	3		
18	90683-GAZ-003	CLIP, TRIM···	-	2	2	2	2	2		
19	91509-GE2-760	SCREW, PAN, 5X11.5···	-	2	2	2	2	2		
20	93404-06012-00	BOLT-WASHER, 6X12···	-	2	2	2	2	2		
21	93903-24380	SCREW, TAPPING, 4X12···	-	3	3	3	3	3		

F-39-1 REAR FENDER/LICENSE LIGHT(ACB125CBFK/L/M/N/P)

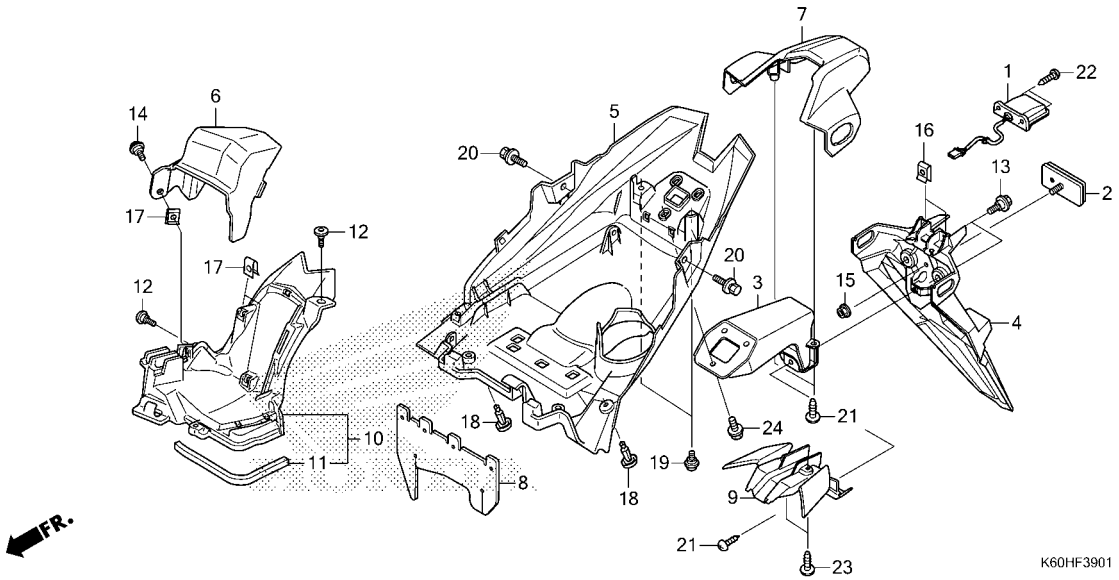

Ref. No.	Part No.	Description	Reqd. QTY ACB125CBF H	K	L	M	N	P	Serial No.	Parts catalogue code
22	93903-24480	SCREW, TAPPING, 4X16	-	2	2	2	2	2		
23	93903-35280	SCREW, TAPPING, 5X12	-	2	2	2	2	2		
24	95701-06012-07	BOLT, FLANGE, 6X12	-	3	3	3	3	3		

BATTERY(ACB125CBFH/K/L/M/N)

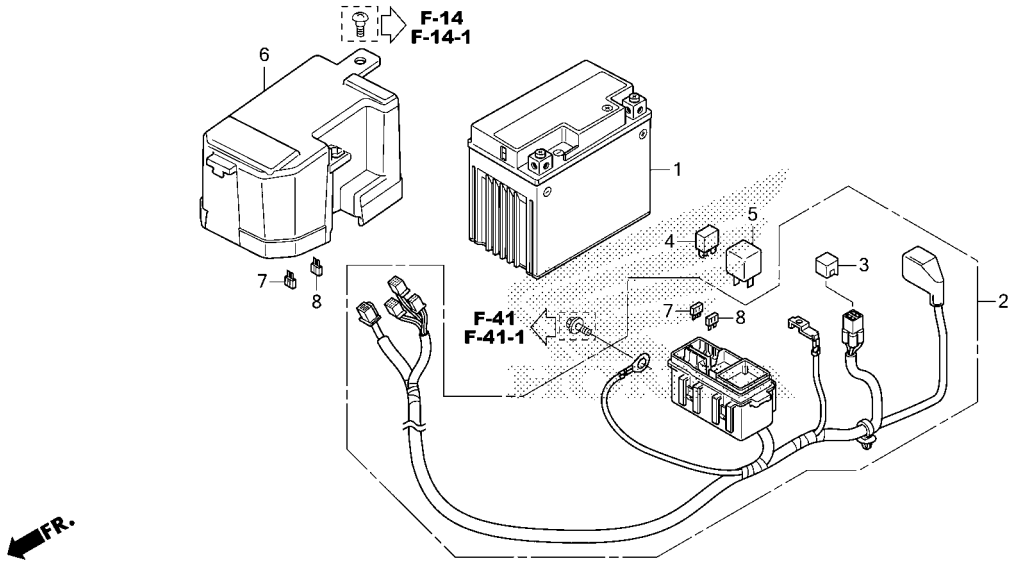

Ref. No.	Part No.	Description	Reqd. QTY ACB125CBF H	K	L	M	N	P	Serial No.	Parts catalogue code
1	31500-KZR-602	BATTERY(GTZ6V)(GS YUASA)·····	1	1	1	1	1	-		
2	32102-K59-A10	SUB HARNESS, BATTERY·····	1	1	1	1	1	-		
3	32606-GEV-761	CAP, DUMMY(4P)(RED)·····	1	1	1	1	1	-		
4	38501-KVZ-631	RELAY ASSY., POWER (MICRO ISO 4P)(MITSUBA)	1	1	1	1	1	-		
	38501-KWN-901	RELAY COMP., POWER (MICRO ISO 4P)(OMRON)	1	1	1	1	1	-		
5	38502-K59-A11	RELAY COMP., POWER(HONDA LOCK)	1	1	1	1	1	-		
	38502-KWN-901	RELAY COMP., POWER(5P) (PANASONIC)	1	1	1	1	1	-		
6	81255-K59-A10	COVER, BATTERY·····	1	-	-	-	-	-		
	81255-K59-A70	·····	-	1	1	1	1	-		
7	98200-41000	FUSE, MINI(10A)·····	6	6	6	6	6	-		
8	98200-42500	FUSE, MINI(25A)·····	2	2	2	2	2	-		

F-40-1 BATTERY(ACB125CBFP)

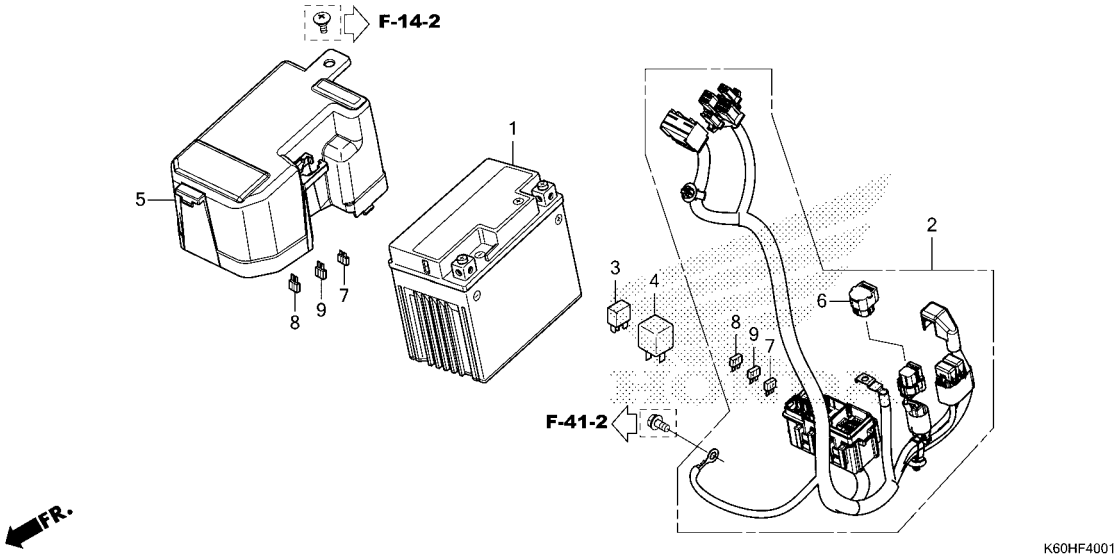

Ref. No.	Part No.	Description	Reqd. QTY ACB125CBF H	K	L	M	N	P	Serial No.	Parts catalogue code
1	31500-KZR-602	BATTERY(GTZ6V)(GS YUASA)·····	-	-	-	-	-	1		
2	32102-K2V-N30	SUB HARNESS, BATTERY·····	-	-	-	-	-	1		
3	38501-KVZ-631	RELAY ASSY., POWER (MICRO ISO 4P)(MITSUBA)	-	-	-	-	-	1		
	38501-KWN-901	RELAY COMP., POWER (MICRO ISO 4P)(OMRON)	-	-	-	-	-	1		
4	38502-K59-A11	RELAY COMP., POWER(HONDA LOCK)	-	-	-	-	-	1		
	38502-KWN-901	RELAY COMP., POWER(5P) (PANASONIC)	-	-	-	-	-	1		
5	81255-K2V-N30	COVER, BATTERY·····	-	-	-	-	-	1		
6	91771-MKK-H11	CAP, DUMMY(6P)(RED)·····	-	-	-	-	-	1		
7	98200-40750	FUSE, MINI(7.5A)·····	-	-	-	-	-	6		
8	98200-41000	FUSE, MINI(10A)·····	-	-	-	-	-	3		
9	98200-42500	FUSE, MINI(25A)·····	-	-	-	-	-	2		

WIRE HARNESS(ACB125CBFH)

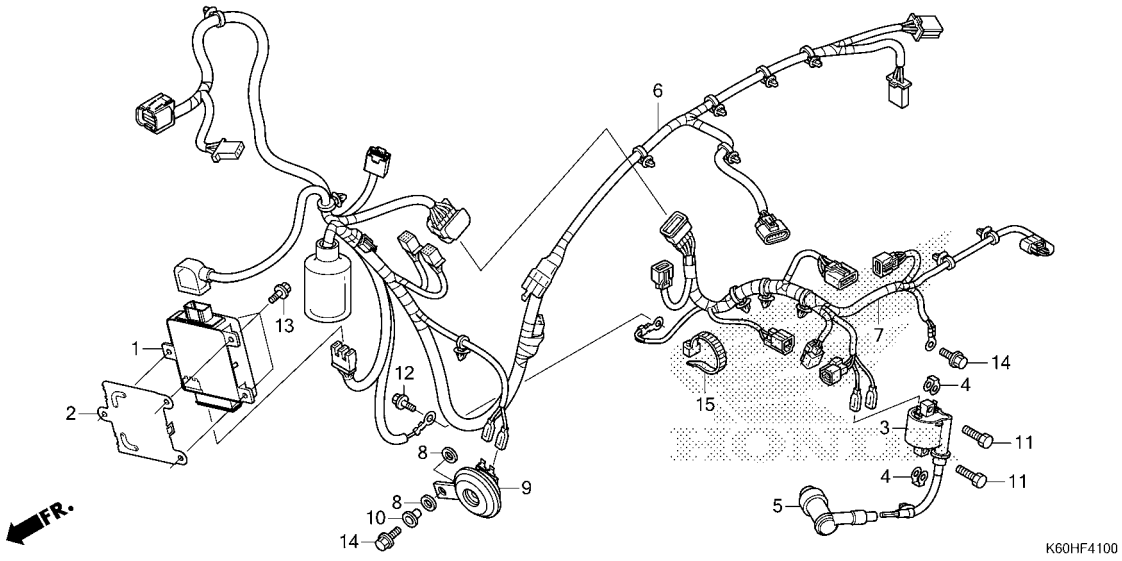

Ref. No.	Part No.	Description	Reqd. QTY ACB125CBF H	K	L	M	N	P	Serial No.	Parts catalogue code
1	30400-K60-B21	CONTROL UNIT, ENGINE	1	-	-	-	-	-		
2	30401-K59-A10	COVER, ENGINE CONTROL UNIT	1	-	-	-	-	-		
3	30510-K35-V01	COIL COMP., IGNITION	1	-	-	-	-	-		
4	30520-GFM-900	SPACER, IGNITION COIL	2	-	-	-	-	-		
5	30700-KWN-711	CAP ASSY., NOISE SUPPRESSOR (NGK)	1	-	-	-	-	-		
	30700-KWN-981	CAP ASSY., NOISE SUPPRESSOR (TOYO)	1	-	-	-	-	-		
6	32100-K60-B00	HARNESS, WIRE	1	-	-	-	-	-		
7	32104-K59-A11	SUB HARNESS, ENGINE	1	-	-	-	-	-		
8	33714-KL3-620	RUBBER, TAILLIGHT BRACKET	2	-	-	-	-	-		
9	38110-KZR-601	HORN COMP.(HIGH)	1	-	-	-	-	-		
10	38112-K41-N00	COLLAR, HORN SETTING	1	-	-	-	-	-		
11	92101-06020-4J	BOLT, HEX., 6X20	2	-	-	-	-	-		
12	95701-06012-00	BOLT, FLANGE, 6X12	1	-	-	-	-	-		
13	95701-06014-00	BOLT, FLANGE, 6X14	3	-	-	-	-	-		
14	95701-06016-00	BOLT, FLANGE, 6X16	2	-	-	-	-	-		
15	90652-KT1-771	BAND, WIRE(BLACK)	1	-	-	-	-	-		

F-41-1 WIRE HARNESS(ACB125CBFK/L/M/N)

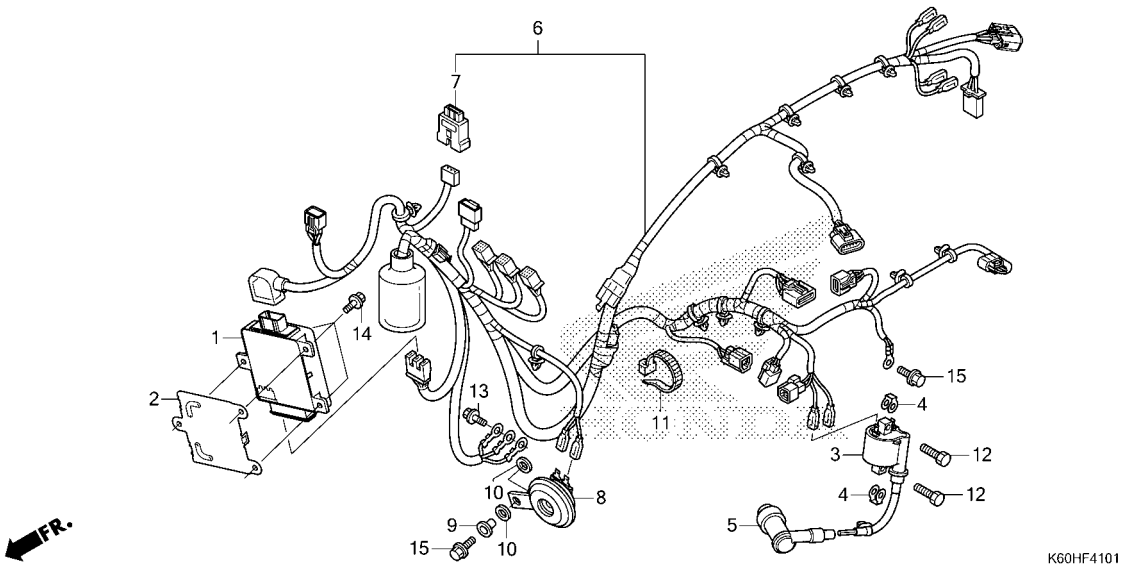

Ref. No.	Part No.	Description	Reqd. QTY ACB125CBF H	K	L	M	N	P	Serial No.	Parts catalogue code
1	30400-K60-B71	CONTROL UNIT, ENGINE·····	-	1	1	1	1	-		
2	30401-K59-A10	COVER, ENGINE CONTROL UNIT···	-	1	1	1	1	-		
3	30510-K35-V01	COIL COMP., IGNITION·····	-	1	1	1	1	-		
4	30520-GFM-900	SPACER, IGNITION COIL·····	-	2	2	2	2	-		
5	30700-KWN-711	CAP ASSY., NOISE SUPPRESSOR (NGK)	-	1	1	1	1	-		
	30700-KWN-981	CAP ASSY., NOISE SUPPRESSOR (TOYO)	-	1	1	1	1	-		
6	32100-K60-B70	HARNESS, WIRE·····	-	1	1	1	1	-		
7	32605-K59-A70	CAP, DUMMY(WPC 2P 090 M)(BLUE)	-	1	1	1	1	-		
8	38110-K44-J01	HORN COMP.(HIGH)·····	-	1	1	1	1	-		
9	61105-KEV-900	COLLAR, HORN SETTING·····	-	1	1	1	1	-		
10	61106-KW6-840	RUBBER B, MOUNTING·····	-	2	2	2	2	-		
11	90652-KT1-771	BAND, WIRE(BLACK)·····	-	1	1	1	1	-		
12	92101-06020-4J	BOLT, HEX., 6X20·····	-	2	2	2	2	-		
13	95701-06012-00	BOLT, FLANGE, 6X12·····	-	1	1	1	1	-		
14	95701-06014-00	BOLT, FLANGE, 6X14·····	-	3	3	3	3	-		
15	95701-06016-00	BOLT, FLANGE, 6X16·····	-	2	2	2	2	-		

F-41-2 WIRE HARNESS(ACB125CBFP)

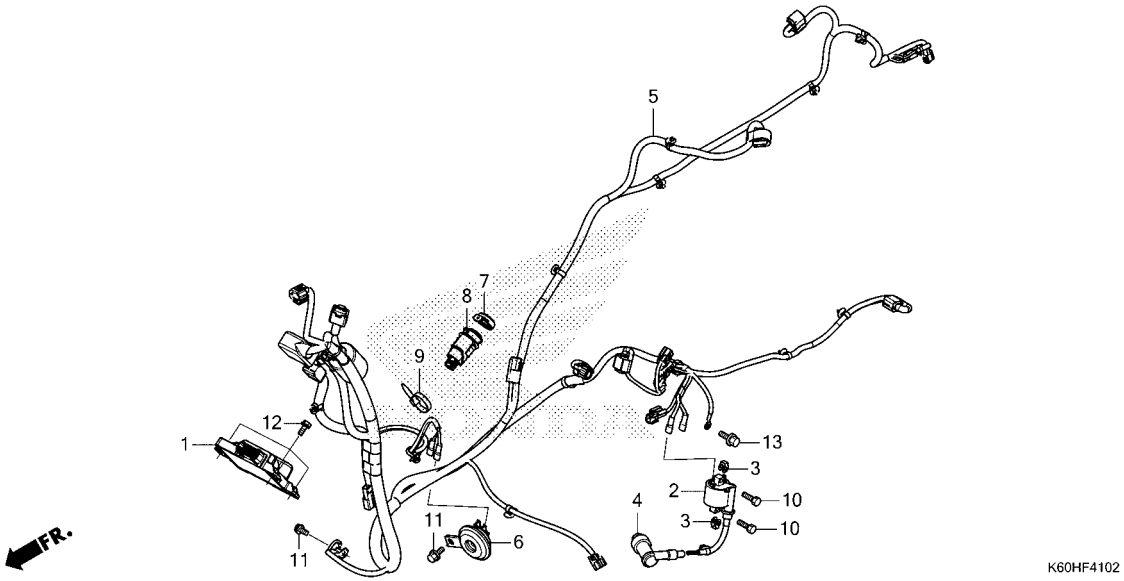

Ref. No.	Part No.	Description	Reqd. QTY ACB125CBF H	K	L	M	N	P	Serial No.	Parts catalogue code
1	30400-K2V-N32	CONTROL UNIT, ENGINE·····	-	-	-	-	-	1		
2	30510-K2V-N31	COIL COMP., IGNITION(MP38)···	-	-	-	-	-	1		
3	30520-GFM-900	SPACER, IGNITION COIL·····	-	-	-	-	-	2		
4	30700-KWN-711	CAP ASSY., NOISE SUPPRESSOR (NGK)	-	-	-	-	-	1		
	30700-KWN-981	CAP ASSY., NOISE SUPPRESSOR (TOYO)	-	-	-	-	-	1		
5	32100-K2V-N31	HARNESS, WIRE·····	-	-	-	-	-	1		
6	38110-K47-M61	HORN COMP.(HIGH)·····	-	-	-	-	-	1		
7	38941-K2F-N01	CAP·····	-	-	-	-	-	1		
8	38950-K2P-V71	CHARGER UNIT, USB(TYPE-A)····	-	-	-	-	-	1		
9	90652-KT1-771	BAND, WIRE(BLACK)·····	-	-	-	-	-	1		
10	92101-06020-4J	BOLT, HEX., 6X20·····	-	-	-	-	-	2		
11	95701-06012-00	BOLT, FLANGE, 6X12·····	-	-	-	-	-	2		
12	95701-06014-00	BOLT, FLANGE, 6X14·····	-	-	-	-	-	3		
13	95701-06016-00	BOLT, FLANGE, 6X16·····	-	-	-	-	-	1		

F-42 FRAME BODY

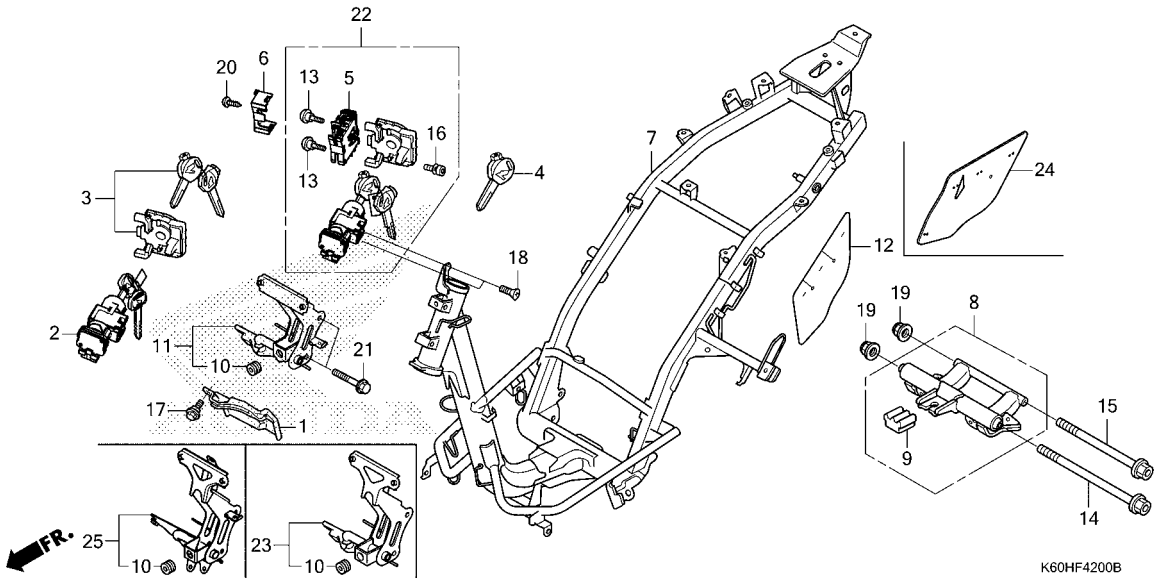

Ref. No.	Part No.	Description	Reqd. QTY ACB125CBF H	K	L	M	N	P	Serial No.	Parts catalogue code
1	30405-KZR-600	GUARD, ENGINE CONTROL UNIT···	1	1	1	1	1	-		
2	35101-K46-N01	SWITCH ASSY., COMBINATION & LOCK	1	-	-	-	-	-		
	35101-K97-A01	SWITCH COMP., COMBINATION & LOCK	-	1	1	1	1	1		
3	35110-K59-A12	SHUTTER, KEY···	1	-	-	-	-	-		
	35110-K60-B61	···	-	1	1	1	1	1		
4	35121-K46-N00	KEY, BLANK··· (N0TAGTOP2REPORDER)	(1)	(1)	(1)	(1)	(1)	(1)		
5	35190-K46-N02	SWITCH ASSY., SEAT OPENER····	1	1	1	1	1	-		
	35190-K1A-N01	···	-	-	-	-	-	1		
6	35191-K27-V01	COVER, CABLE···	1	1	1	1	1	1		
7	50100-K59-A11	BODY COMP., FRAME···	1	-	-	-	-	-		
	50100-K59-A70	···	-	1	1	1	1	-		
	50100-K2V-N31	···	-	-	-	-	-	1		
8	50350-K59-A10	LINK ASSY., ENGINE HANGER····	1	1	1	1	1	1		
9	50352-K59-A10	RUBBER, LINK STOPPER·····	1	1	1	1	1	1		
10	64216-GJ2-730	RUBBER, SCREEN SETTING·····	1	1	1	1	1	1		
11	64223-K60-T00	STAY, FR. COVER·····	1	-	-	-	-	-		
12	80105-K59-A10	GUARD, DUCT···	1	-	-	-	-	-		
13	90101-MT4-000	SCREW, SCREEN SETTING·····	2	2	2	2	2	2		
14	90105-KVY-900	BOLT, FLANGE, 10X270·····	1	1	1	1	1	1		
15	90106-GCC-C50	BOLT, FLANGE, 10X238·····	1	1	1	1	1	1		
16	90111-MR5-000	BOLT, SOCKET, 5X9·····	1	1	1	1	1	1		
17	90116-KVB-900	BOLT, FLANGE, 6MM·····	1	1	1	1	1	-		
18	90164-KZL-A00	SCREW, U-LOCK FLAT, 6X12·····	2	2	2	2	2	2		

FRAME BODY

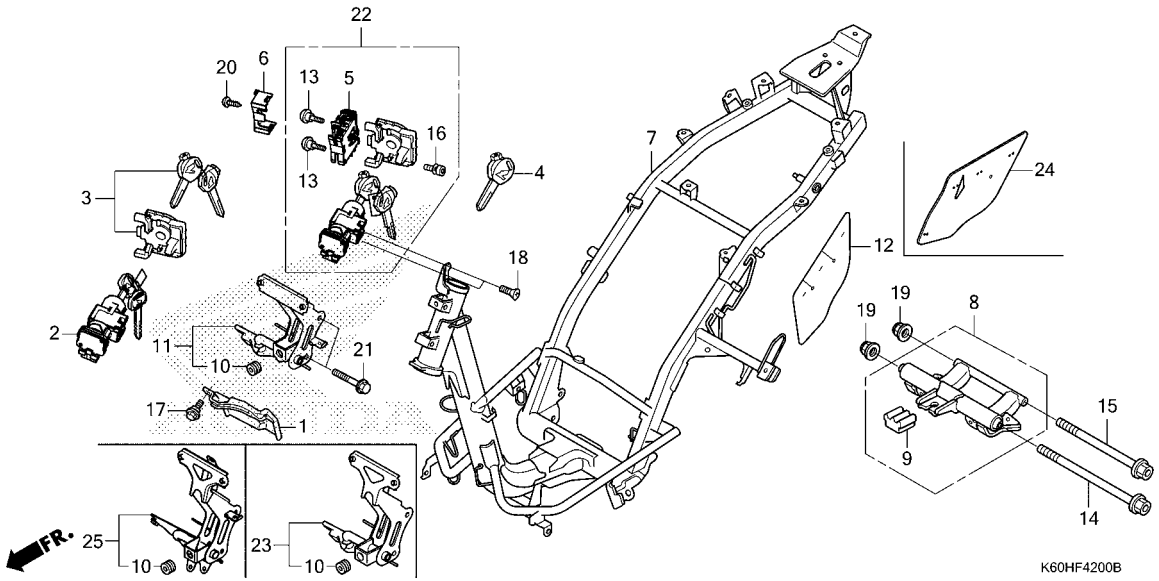

Ref. No.	Part No.	Description	Reqd. QTY ACB125CBF H	K	L	M	N	P	Serial No.	Parts catalogue code
19	90304-KGH-901	NUT, U, 10MM(FUJI SEIMITSU)··	2	2	2	2	2	2		
20	93901-24320	SCREW, TAPPING, 4X12·····	1	1	1	1	1	1		
21	95801-08045-08	BOLT, FLANGE, 8X45·····	2	2	2	2	2	2		
22	35100-K60-B61	SWITCH ASSY., COMBINATION & LOCK	-	1	1	1	1	-		
	35100-K60-B62	·····	-	-	-	-	-	1		
23	64223-K60-B70	STAY, FR. COVER·····	-	1	1	1	1	-		
24	80106-K59-A70	GUARD, DUCT·····	-	1	1	1	1	1		
25	64223-K2V-N30	STAY COMP., FR. COVER·····	-	-	-	-	-	1		

F-43 RESERVE TANK

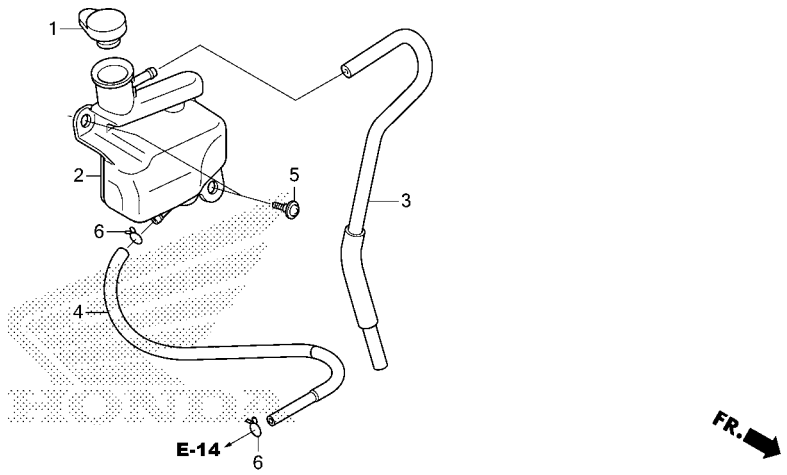

K60HF4300

Ref. No.	Part No.	Description	Reqd. QTY ACB125CBF H	K	L	M	N	P	Serial No.	Parts catalogue code
1	19104-KVB-930	CAP, RESERVE TANK	1	1	1	1	1	1		
2	19111-K59-A10	TANK, RESERVE	1	1	1	1	1	1		
3	19112-K59-A10	TUBE, RESERVE DRAIN	1	1	1	1	1	1		
4	19118-K59-A10	HOSE, RESERVE TANK	1	1	1	1	1	1		
5	91509-GE2-760	SCREW, PAN, 5X11.5	2	2	2	2	2	2		
6	95002-02100	CLIP, TUBE(B10)	2	2	2	2	2	2		

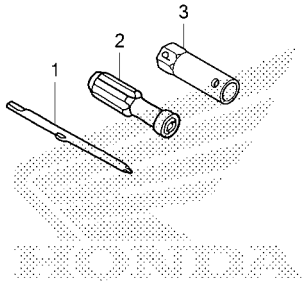

K60HF4600

Ref. No.	Part No.	Description	Reqd. QTY ACB125CBF H	K	L	M	N	P	Serial No.	Parts catalogue code
1	89102-538-000	DRIVER, SCREW(NO.2 + -)·····	1	1	1	1	1	1		
2	89103-538-000	GRIP·····	1	1	1	1	1	1		
3	89216-KVY-960	WRENCH, SPARK PLUG·····	1	1	1	1	1	1		

F-47 CAUTION LABEL(ACB125CBFH)

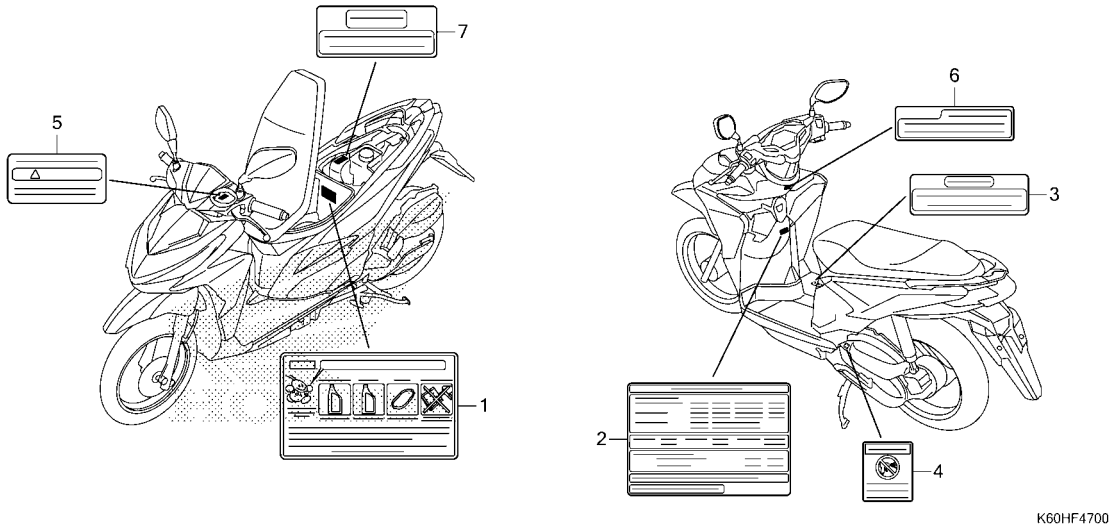

Ref. No.	Part No.	Description	Reqd. QTY ACB125CBF H	K	L	M	N	P	Serial No.	Parts catalogue code
1	87504-K59-H00	LABEL, REPLACEMENT INFORMATION	1	-	-	-	-	-		
2	87505-K81-H20	LABEL, TIRE	1	-	-	-	-	-		
3	87506-KGH-970	MARK, BATTERY CAUTION	1	-	-	-	-	-		
4	87509-KWW-A40	LABEL, AIR CLEANER ELEMENT NOTICE(INDONESIAN)	1	-	-	-	-	-		
5	87514-K50-M00	LABEL, CBS CAUTION	1	-	-	-	-	-		
6	87560-KVB-860	LABEL, DRIVE CAUTION	1	-	-	-	-	-		
7	87586-KYT-860	LABEL, FUEL CAUTION	1	-	-	-	-	-		

F-47-1 CAUTION LABEL(ACB125CBFK/L/M/N/P)

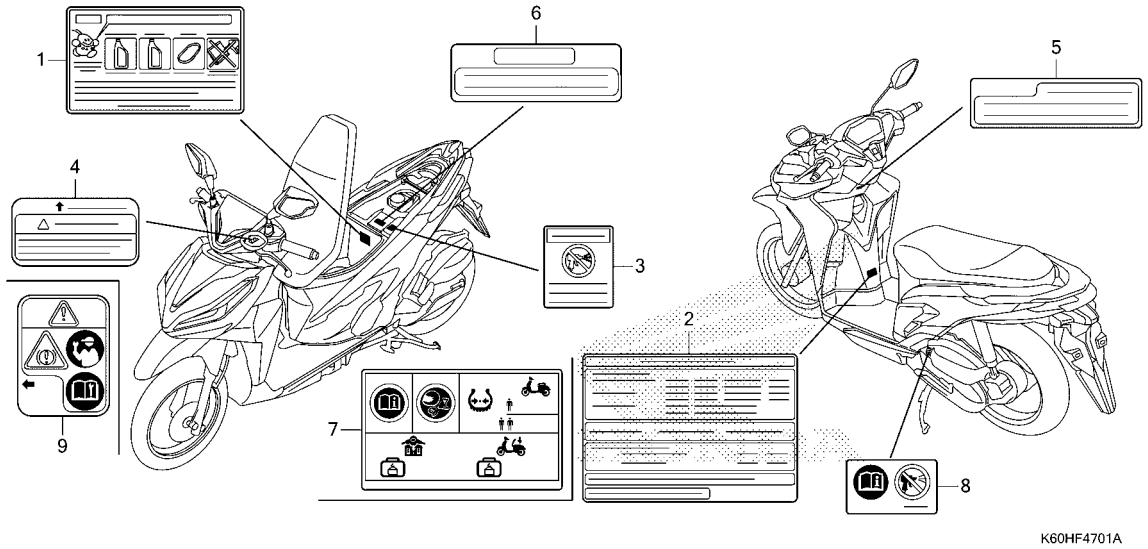

Ref. No.	Part No.	Description	Reqd. QTY ACB125CBF H	K	L	M	N	P	Serial No.	Parts catalogue code
1	87504-K59-H00	LABEL, REPLACEMENT INFORMATION	-	1	1	1	1	1		
2	87505-K81-M00	LABEL, TIRE	-	1	1	1	1	-		
3	87509-KWP-900	LABEL, AIR CLEANER ELEMENT NOTICE	-	1	1	1	1	-		
4	87514-K93-A00	LABEL, CBS CAUTION	-	1	1	1	1	-		
5	87560-KVB-860	LABEL, DRIVE CAUTION	-	1	1	1	1	-		
6	87586-KYT-860	LABEL, FUEL CAUTION	-	1	1	1	1	1		
7	87505-K0J-N00	LABEL, TIRE & DRIVE & CARGO	-	-	-	-	-	1		
8	87509-K72-630	LABEL, AIR CLEANER ELEMENT NOTICE	-	-	-	-	-	1		
9	87514-K2S-N00	LABEL, CBS CAUTION(PICTOGRAPH)	-	-	-	-	-	1		

F-48 MARK/STRIPE(ACB125CBFH)

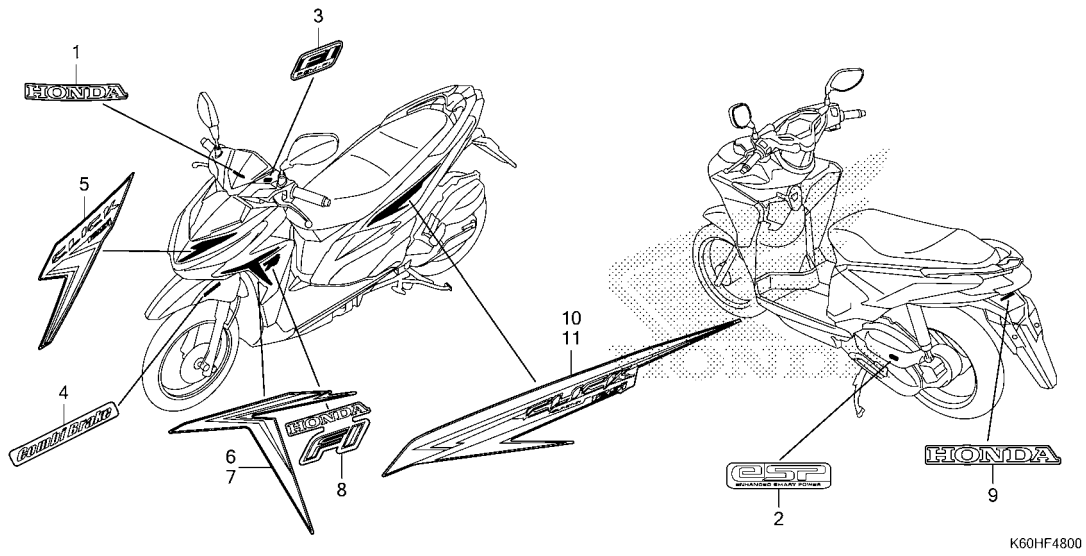

Ref. No.	Part No.	Description	Reqd. QTY ACB125CBF H	K	L	M	N	P	Serial No.	Parts catalogue code
1	86101-KZR-600ZB	MARK, HONDA(75MM)								
		TYPE1.....	1	-	-	-	-	-		
2	86170-KZR-600	MARK, ENGINE.....	1	-	-	-	-	-		
3	86531-KYZ-710ZA	MARK(FI)								
		TYPE1.....	1	-	-	-	-	-		
4	86611-K59-A00ZD	MARK(COMBI BRAKE)								
		TYPE2.....	2	-	-	-	-	-		
	86611-K59-A00ZE	*TYPE1*.....	2	-	-	-	-	-		
	86611-K60-H40ZA	*TYPE1*.....	2	-	-	-	-	-		
5	86641-K60-H40ZA	STRIPE, FR. COVER								
		TYPE3.....	1	-	-	-	-	-		
	86641-K60-H40ZB	*TYPE2*.....	1	-	-	-	-	-		
	86641-K60-H40ZC	*TYPE1*.....	1	-	-	-	-	-		
	86641-K60-H40ZD	*TYPE4*.....	1	-	-	-	-	-		
6	86642-K60-H40ZA	STRIPE A, R. FR. COVER								
		TYPE4.....	1	-	-	-	-	-		
	86642-K60-H40ZB	*TYPE3*.....	1	-	-	-	-	-		
	86642-K60-H40ZC	*TYPE2*.....	1	-	-	-	-	-		
	86642-K60-H40ZD	*TYPE1*.....	1	-	-	-	-	-		
7	86643-K60-H40ZA	STRIPE A, L. FR. COVER								
		TYPE4.....	1	-	-	-	-	-		
	86643-K60-H40ZB	*TYPE3*.....	1	-	-	-	-	-		
	86643-K60-H40ZC	*TYPE2*.....	1	-	-	-	-	-		
	86643-K60-H40ZD	*TYPE1*.....	1	-	-	-	-	-		
8	86644-K60-H40ZA	STRIPE B, FR. COVER								
		TYPE4.....	2	-	-	-	-	-		
	86644-K60-H40ZB	*TYPE3*.....	2	-	-	-	-	-		
	86644-K60-H40ZC	*TYPE2*.....	2	-	-	-	-	-		

MARK/STRIPE(ACB125CBFH)

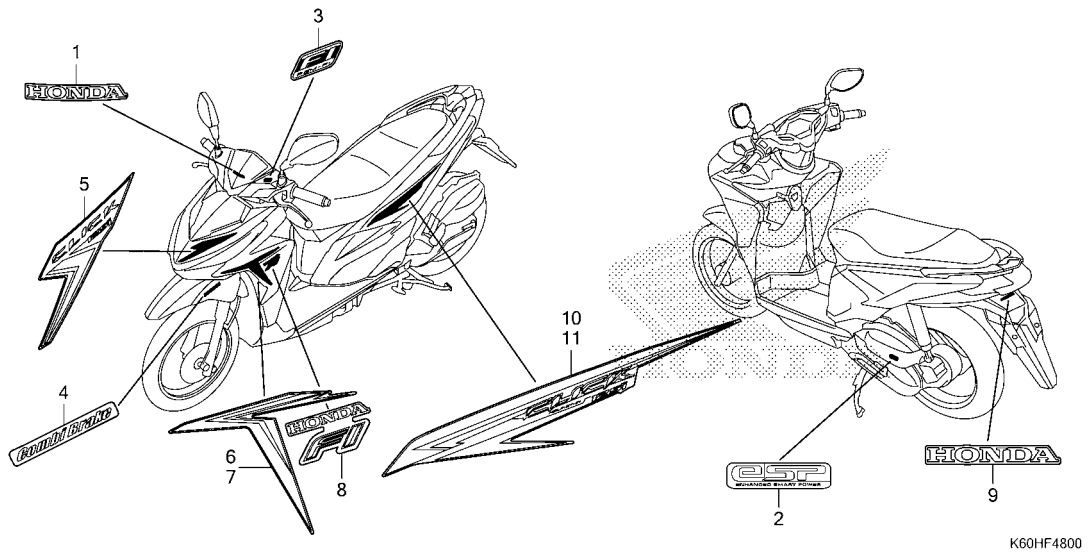

Ref. No.	Part No.	Description	Reqd. QTY ACB125CBF H	K	L	M	N	P	Serial No.	Parts catalogue code
(8)	86644-K60-H40ZD	STRIPE B, FR. COVER								
		TYPE1.....	2	-	-	-	-	-		
9	86811-K20-900ZB	MARK, HONDA(50MM)								
		TYPE1.....	1	-	-	-	-	-		
10	86831-K60-H40ZA	STRIPE, R. BODY COVER								
		TYPE4.....	1	-	-	-	-	-		
	86831-K60-H40ZB	*TYPE3*.....	1	-	-	-	-	-		
	86831-K60-H40ZC	*TYPE2*.....	1	-	-	-	-	-		
	86831-K60-H40ZD	*TYPE1*.....	1	-	-	-	-	-		
11	86832-K60-H40ZA	STRIPE, L. BODY COVER								
		TYPE4.....	1	-	-	-	-	-		
	86832-K60-H40ZB	*TYPE3*.....	1	-	-	-	-	-		
	86832-K60-H40ZC	*TYPE2*.....	1	-	-	-	-	-		
	86832-K60-H40ZD	*TYPE1*.....	1	-	-	-	-	-		

F-48-1 MARK/STRIPE(ACB125CBFK/L/M/N)

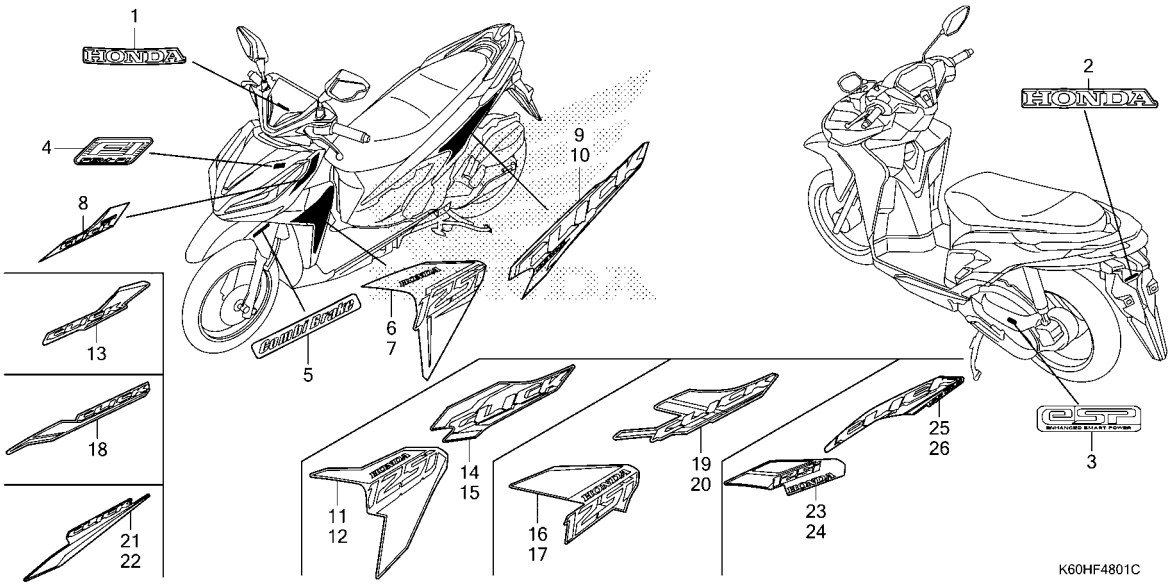

Ref. No.	Part No.	Description	Reqd. QTY ACB125CBF H	K	L	M	N	P	Serial No.	Parts catalogue code
1	86101-K93-N00ZE	MARK, HONDA(65MM)								
		TYPE2.....	-	1	1	1	1	-		
2	86102-KZR-700ZA	MARK, HONDA								
		TYPE1.....	-	1	1	1	1	-		
3	86170-KZR-600	MARK, ENGINE.....	-	1	1	1	1	-		
4	86531-KYZ-710ZA	MARK(FI)								
		TYPE1.....	-	1	1	1	1	-		
5	86611-K59-A70ZA	MARK(COMBI BRAKE)								
		TYPE9.....	-	2	2	2	2	-		
	86611-K59-A70ZB	*TYPE8*.....	-	2	-	-	-	-		
	86611-K59-A70ZJ	*TYPE10*.....	-	2	-	-	-	-		
	86611-K59-A70ZL	*TYPE11*.....	-	2	-	-	-	-		
	86611-K59-A80ZE	*TYPE2*.....	-	-	2	2	2	-		
	86611-K59-A80ZF	*TYPE1*.....	-	-	2	2	2	-		
	86611-K59-A80ZG	*TYPE3*.....	-	-	2	2	2	-		
	86611-K2V-N10ZA	*TYPE1*.....	-	-	-	-	2	-		
6	86641-K60-H50ZA	STRIPE A, R. FR. COVER								
		TYPE4.....	-	1	-	-	-	-		
	86641-K60-H50ZB	*TYPE3*.....	-	1	-	-	-	-		
	86641-K60-H50ZC	*TYPE2*.....	-	1	-	-	-	-		
	86641-K60-H50ZD	*TYPE1*.....	-	1	-	-	-	-		
7	86642-K60-H50ZA	STRIPE A, L. FR. COVER								
		TYPE4.....	-	1	-	-	-	-		
	86642-K60-H50ZB	*TYPE3*.....	-	1	-	-	-	-		
	86642-K60-H50ZC	*TYPE2*.....	-	1	-	-	-	-		
	86642-K60-H50ZD	*TYPE1*.....	-	1	-	-	-	-		
8	86643-K60-H50ZA	STRIPE B, FR. COVER								
		TYPE4.....	-	2	-	-	-	-		

F-48-1 MARK/STRIPE(ACB125CBFK/L/M/N)

Ref. No.	Part No.	Description	Reqd. QTY ACB125CBF H	K	L	M	N	P	Serial No.	Parts catalogue code
(8)	86643-K60-H50ZB	STRIPE B, FR. COVER								
		TYPE3.....	-	2	-	-	-	-		
	86643-K60-H50ZC	*TYPE2*.....	-	2	-	-	-	-		
	86643-K60-H50ZD	*TYPE1*.....	-	2	-	-	-	-		
9	86831-K60-H50ZA	STRIPE, R. BODY COVER								
		TYPE4.....	-	1	-	-	-	-		
	86831-K60-H50ZB	*TYPE3*.....	-	1	-	-	-	-		
	86831-K60-H50ZC	*TYPE2*.....	-	1	-	-	-	-		
	86831-K60-H50ZD	*TYPE1*.....	-	1	-	-	-	-		
10	86832-K60-H50ZA	STRIPE, L. BODY COVER								
		TYPE4.....	-	1	-	-	-	-		
	86832-K60-H50ZB	*TYPE3*.....	-	1	-	-	-	-		
	86832-K60-H50ZC	*TYPE2*.....	-	1	-	-	-	-		
	86832-K60-H50ZD	*TYPE1*.....	-	1	-	-	-	-		
11	86641-K60-H70ZA	STRIPE A, R. FR. COVER								
		TYPE4.....	-	-	1	-	-	-		
	86641-K60-H70ZB	*TYPE3*.....	-	-	1	-	-	-		
	86641-K60-H70ZC	*TYPE2*.....	-	-	1	-	-	-		
	86641-K60-H70ZD	*TYPE1*.....	-	-	1	-	-	-		
12	86642-K60-H70ZA	STRIPE A, L. FR. COVER								
		TYPE4.....	-	-	1	-	-	-		
	86642-K60-H70ZB	*TYPE3*.....	-	-	1	-	-	-		
	86642-K60-H70ZC	*TYPE2*.....	-	-	1	-	-	-		
	86642-K60-H70ZD	*TYPE1*.....	-	-	1	-	-	-		
13	86643-K60-H70ZA	STRIPE B, L. FR. COVER								
		TYPE4.....	-	-	1	-	-	-		
	86643-K60-H70ZB	*TYPE3*.....	-	-	1	-	-	-		
	86643-K60-H70ZC	*TYPE2*.....	-	-	1	-	-	-		
	86643-K60-H70ZD	*TYPE1*.....	-	-	1	-	-	-		
14	86831-K60-H70ZA	STRIPE, R. BODY COVER								
		TYPE4.....	-	-	1	-	-	-		
	86831-K60-H70ZB	*TYPE3*.....	-	-	1	-	-	-		
	86831-K60-H70ZC	*TYPE2*.....	-	-	1	-	-	-		
	86831-K60-H70ZD	*TYPE1*.....	-	-	1	-	-	-		
15	86832-K60-H70ZA	STRIPE, L. BODY COVER								
		TYPE4.....	-	-	1	-	-	-		
	86832-K60-H70ZB	*TYPE3*.....	-	-	1	-	-	-		
	86832-K60-H70ZC	*TYPE2*.....	-	-	1	-	-	-		
	86832-K60-H70ZD	*TYPE1*.....	-	-	1	-	-	-		
16	86641-K60-HA0ZA	STRIPE A, R. FR. COVER								
		TYPE4.....	-	-	-	1	-	-		
	86641-K60-HA0ZB	*TYPE3*.....	-	-	-	1	-	-		
	86641-K60-HA0ZC	*TYPE2*.....	-	-	-	1	-	-		
	86641-K60-HA0ZD	*TYPE1*.....	-	-	-	1	-	-		
17	86642-K60-HA0ZA	STRIPE A, L. FR. COVER								
		TYPE4.....	-	-	-	1	-	-		
	86642-K60-HA0ZB	*TYPE3*.....	-	-	-	1	-	-		
	86642-K60-HA0ZC	*TYPE2*.....	-	-	-	1	-	-		
	86642-K60-HA0ZD	*TYPE1*.....	-	-	-	1	-	-		
18	86643-K60-HA0ZA	STRIPE B, L. FR. COVER								
		TYPE4.....	-	-	-	1	-	-		
	86643-K60-HA0ZB	*TYPE3*.....	-	-	-	1	-	-		
	86643-K60-HA0ZC	*TYPE2*.....	-	-	-	1	-	-		
	86643-K60-HA0ZD	*TYPE1*.....	-	-	-	1	-	-		
19	86831-K60-HA0ZA	STRIPE, R. BODY COVER								
		TYPE4.....	-	-	-	1	-	-		

F-48-1 MARK/STRIPE(ACB125CBFK/L/M/N)

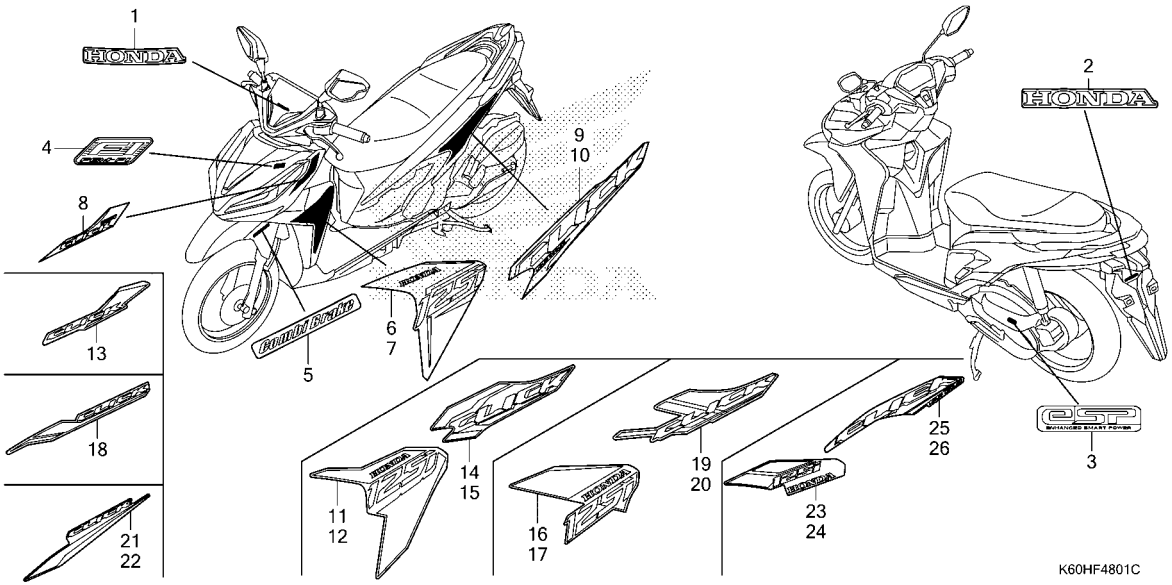

Ref. No.	Part No.	Description	Reqd. QTY ACB125CBF H	K	L	M	N	P	Serial No.	Parts catalogue code
19)	86831-K60-HA0ZB	STRIPE, R. BODY COVER								
		TYPE3.....	-	-	-	1	-	-		
	86831-K60-HA0ZC	*TYPE2*.....	-	-	-	1	-	-		
	86831-K60-HA0ZD	*TYPE1*.....	-	-	-	1	-	-		
20	86832-K60-HA0ZA	STRIPE, L. BODY COVER								
		TYPE4.....	-	-	-	1	-	-		
	86832-K60-HA0ZB	*TYPE3*.....	-	-	-	1	-	-		
	86832-K60-HA0ZC	*TYPE2*.....	-	-	-	1	-	-		
	86832-K60-HA0ZD	*TYPE1*.....	-	-	-	1	-	-		
21	86641-K2V-H00ZA	STRIPE A, R. FR. COVER								
		TYPE5.....	-	-	-	-	1	-		
	86641-K2V-H00ZB	*TYPE4*.....	-	-	-	-	1	-		
	86641-K2V-H00ZC	*TYPE3*.....	-	-	-	-	1	-		
	86641-K2V-H00ZD	*TYPE2*.....	-	-	-	-	1	-		
	86641-K2V-H00ZE	*TYPE1*.....	-	-	-	-	1	-		
22	86642-K2V-H00ZA	STRIPE A, L. FR. COVER								
		TYPE5.....	-	-	-	-	1	-		
	86642-K2V-H00ZB	*TYPE4*.....	-	-	-	-	1	-		
	86642-K2V-H00ZC	*TYPE3*.....	-	-	-	-	1	-		
	86642-K2V-H00ZD	*TYPE2*.....	-	-	-	-	1	-		
	86642-K2V-H00ZE	*TYPE1*.....	-	-	-	-	1	-		
23	86643-K2V-H00ZA	STRIPE B, R. FR. COVER								
		TYPE5.....	-	-	-	-	1	-		
	86643-K2V-H00ZB	*TYPE4*.....	-	-	-	-	1	-		
	86643-K2V-H00ZC	*TYPE3*.....	-	-	-	-	1	-		
	86643-K2V-H00ZD	*TYPE2*.....	-	-	-	-	1	-		
	86643-K2V-H00ZE	*TYPE1*.....	-	-	-	-	1	-		

F-48-1 MARK/STRIPE(ACB125CBFK/L/M/N)

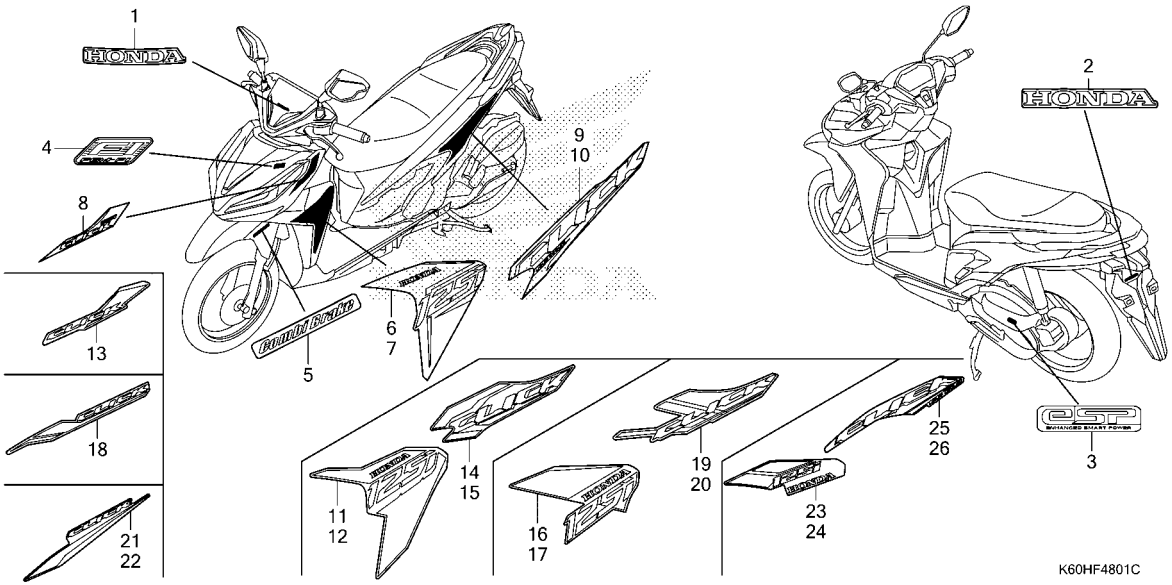

Ref. No.	Part No.	Description	Reqd. QTY ACB125CBF H	K	L	M	N	P	Serial No.	Parts catalogue code
24	86644-K2V-H00ZA	STRIPE B, L. FR. COVER								
		TYPE5.....	-	-	-	-	1	-		
	86644-K2V-H00ZB	*TYPE4*.....	-	-	-	-	1	-		
	86644-K2V-H00ZC	*TYPE3*.....	-	-	-	-	1	-		
	86644-K2V-H00ZD	*TYPE2*.....	-	-	-	-	1	-		
	86644-K2V-H00ZE	*TYPE1*.....	-	-	-	-	1	-		
25	86831-K2V-H00ZA	STRIPE, R. BODY COVER								
		TYPE5.....	-	-	-	-	1	-		
	86831-K2V-H00ZB	*TYPE4*.....	-	-	-	-	1	-		
	86831-K2V-H00ZC	*TYPE3*.....	-	-	-	-	1	-		
	86831-K2V-H00ZD	*TYPE2*.....	-	-	-	-	1	-		
	86831-K2V-H00ZE	*TYPE1*.....	-	-	-	-	1	-		
26	86832-K2V-H00ZA	STRIPE, L. BODY COVER								
		TYPE5.....	-	-	-	-	1	-		
	86832-K2V-H00ZB	*TYPE4*.....	-	-	-	-	1	-		
	86832-K2V-H00ZC	*TYPE3*.....	-	-	-	-	1	-		
	86832-K2V-H00ZD	*TYPE2*.....	-	-	-	-	1	-		
	86832-K2V-H00ZE	*TYPE1*.....	-	-	-	-	1	-		

F-48-2 MARK/STRIPE(ACB125CBFP)

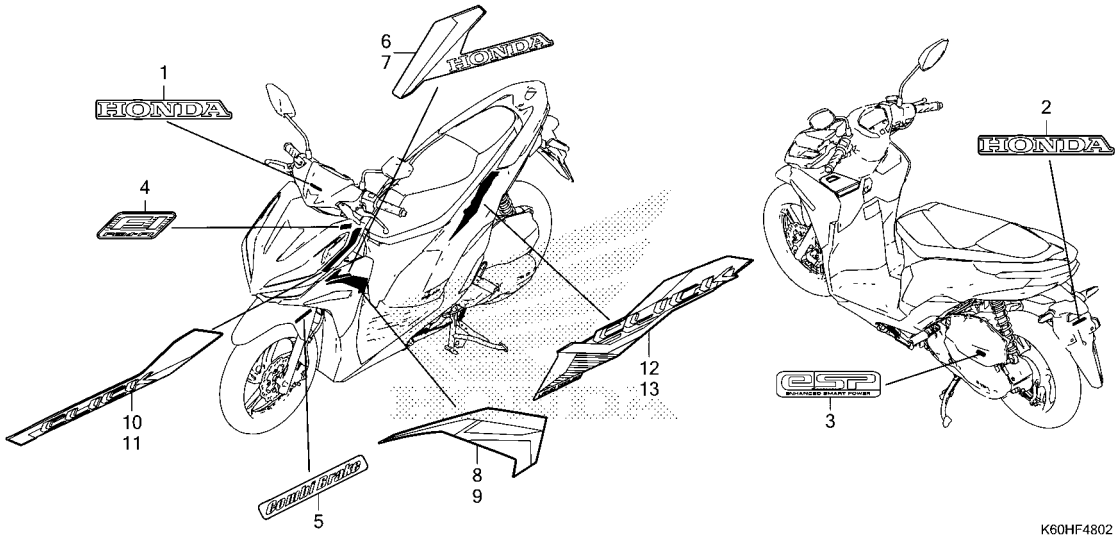

Ref. No.	Part No.	Description	Reqd. QTY ACB125CBF H	K	L	M	N	P	Serial No.	Parts catalogue code
1	86101-K2V-H20ZA	MARK, HONDA(65MM) *TYPE5*	-	-	-	-	-	1		
	86101-K2V-H20ZB	*TYPE4*	-	-	-	-	-	1		
	86101-K2V-H20ZC	*TYPE3*	-	-	-	-	-	1		
	86101-K2V-H20ZD	*TYPE2*	-	-	-	-	-	1		
	86101-K2V-H20ZE	*TYPE1*	-	-	-	-	-	1		
2	86102-KZR-700ZA	MARK, HONDA *TYPE1*	-	-	-	-	-	1		
3	86170-KZR-600	MARK, ENGINE	-	-	-	-	-	1		
4	86531-KYZ-710ZA	MARK(FI) *TYPE1*	-	-	-	-	-	1		
5	86611-K2V-H20ZA	MARK(COMBI BRAKE) *TYPE5*	-	-	-	-	-	2		
	86611-K2V-H20ZB	*TYPE4*	-	-	-	-	-	2		
	86611-K2V-H20ZC	*TYPE3*	-	-	-	-	-	2		
	86611-K2V-H20ZD	*TYPE2*	-	-	-	-	-	2		
	86611-K2V-H20ZE	*TYPE1*	-	-	-	-	-	2		
6	86642-K2V-H20ZA	STRIPE A, R. FR. COVER *TYPE5*	-	-	-	-	-	1		
	86642-K2V-H20ZB	*TYPE4*	-	-	-	-	-	1		
	86642-K2V-H20ZC	*TYPE3*	-	-	-	-	-	1		
	86642-K2V-H20ZD	*TYPE2*	-	-	-	-	-	1		
	86642-K2V-H20ZE	*TYPE1*	-	-	-	-	-	1		
7	86643-K2V-H20ZA	STRIPE A, L. FR. COVER *TYPE5*	-	-	-	-	-	1		
	86643-K2V-H20ZB	*TYPE4*	-	-	-	-	-	1		
	86643-K2V-H20ZC	*TYPE3*	-	-	-	-	-	1		
	86643-K2V-H20ZD	*TYPE2*	-	-	-	-	-	1		

F-48-2 MARK/STRIPE(ACB125CBFP)

Ref. No.	Part No.	Description	Reqd. QTY ACB125CBF H	K	L	M	N	P	Serial No.	Parts catalogue code
(7)	86643-K2V-H20ZE	STRIPE A, L. FR. COVER								
		TYPE1.....	-	-	-	-	-	1		
8	86644-K2V-H20ZA	STRIPE B, R. FR. COVER								
		TYPE5.....	-	-	-	-	-	1		
	86644-K2V-H20ZB	*TYPE4*.....	-	-	-	-	-	1		
	86644-K2V-H20ZC	*TYPE3*.....	-	-	-	-	-	1		
	86644-K2V-H20ZD	*TYPE2*.....	-	-	-	-	-	1		
	86644-K2V-H20ZE	*TYPE1*.....	-	-	-	-	-	1		
9	86645-K2V-H20ZA	STRIPE B, L. FR. COVER								
		TYPE5.....	-	-	-	-	-	1		
	86645-K2V-H20ZB	*TYPE4*.....	-	-	-	-	-	1		
	86645-K2V-H20ZC	*TYPE3*.....	-	-	-	-	-	1		
	86645-K2V-H20ZD	*TYPE2*.....	-	-	-	-	-	1		
	86645-K2V-H20ZE	*TYPE1*.....	-	-	-	-	-	1		
10	86646-K2V-H20ZA	STRIPE, R. FR. COVER								
		TYPE5.....	-	-	-	-	-	1		
	86646-K2V-H20ZB	*TYPE4*.....	-	-	-	-	-	1		
	86646-K2V-H20ZC	*TYPE3*.....	-	-	-	-	-	1		
	86646-K2V-H20ZD	*TYPE2*.....	-	-	-	-	-	1		
	86646-K2V-H20ZE	*TYPE1*.....	-	-	-	-	-	1		
11	86647-K2V-H20ZA	STRIPE, L. FR. COVER								
		TYPE5.....	-	-	-	-	-	1		
	86647-K2V-H20ZB	*TYPE4*.....	-	-	-	-	-	1		
	86647-K2V-H20ZC	*TYPE3*.....	-	-	-	-	-	1		
	86647-K2V-H20ZD	*TYPE2*.....	-	-	-	-	-	1		
	86647-K2V-H20ZE	*TYPE1*.....	-	-	-	-	-	1		
12	86832-K2V-H20ZA	STRIPE, R. BODY COVER								
		TYPE5.....	-	-	-	-	-	1		
	86832-K2V-H20ZB	*TYPE4*.....	-	-	-	-	-	1		
	86832-K2V-H20ZC	*TYPE3*.....	-	-	-	-	-	1		
	86832-K2V-H20ZD	*TYPE2*.....	-	-	-	-	-	1		
	86832-K2V-H20ZE	*TYPE1*.....	-	-	-	-	-	1		
13	86833-K2V-H20ZA	STRIPE, L. BODY COVER								
		TYPE5.....	-	-	-	-	-	1		
	86833-K2V-H20ZB	*TYPE4*.....	-	-	-	-	-	1		
	86833-K2V-H20ZC	*TYPE3*.....	-	-	-	-	-	1		
	86833-K2V-H20ZD	*TYPE2*.....	-	-	-	-	-	1		
	86833-K2V-H20ZE	*TYPE1*.....	-	-	-	-	-	1		

PART NO. INDEX

Part Number	Page	Ref.
06000		
06430-K44-V80	112	1
06430-KWN-900	112	1
06430-KZL-930	112	1
06451-961-405	106	1
06451-K59-A71	107	1
06455-K59-A71	107	2
06455-KVB-T01	106	2
06530-GBG-B20	85	1
06531-GBG-B20	85	2
11000		
11100-K2V-N40	63	1
11100-K59-A10	63	1
11103-KVB-901	63	2
	65	1
11103-KVB-930	63	2
	65	1
11114-KWN-900	63	3
11116-KZR-600	63	4
11117-KWN-901	63	5
11200-K2V-N40	65	2
11200-K35-J00	65	2
11203-K35-J00	65	3
11203-KVB-901	65	3
11204-KGF-900	61	1
11205-GBC-300	63	6
	65	4
11211-KWN-980	61	2
11341-K59-A10	54	1
11341-K66-V10	55	1
11342-K59-A10	54	2
11343-KVG-900	65	5
11361-KWN-901	63	7
11363-KWN-900	63	8
11395-KZR-600	54	3
	55	2
12000		
12010-K66-V00	45	1
12010-KZR-603	45	1
12100-KZR-600	50	1
12191-KZR-600	50	2
12204-KWN-P00	45	2
12206-K66-V00	56	1
12206-KZR-600	56	1
12207-KWN-900	56	2
12209-GB4-681	47	1
12209-GB4-682	47	1
12251-K12-901	45	3
12251-K77-V01	45	3
12251-KZR-601	45	3
12252-K60-B60	45	3
12310-K66-V00	44	1
12310-KZR-700	43	1
12361-035-000	65	6
12391-K59-A11	43	2
12391-K66-V01	44	2
12391-KZR-600	43	2
13000		
13000-K60-B00	67	1
13000-K60-B60	67	1
13011-K60-305	67	2
13011-K60-B00	67	2
13011-K60-B60	67	2
13021-K60-305	67	2
13021-K60-B60	67	2
13021-KWN-900	67	2
13021-KZR-600	67	2
13031-K60-305	67	2
13031-K60-B60	67	2
13031-KWN-900	67	2
13031-KZR-600	67	2
13041-K60-305	67	2
13041-K60-B60	67	2
13041-KWN-900	67	2
13041-KZR-600	67	2
13051-K60-305	67	2
13051-K60-B60	67	2
13051-KWN-900	67	2
13051-KZR-600	67	2
13101-KWN-902	67	3
13101-KWN-P00	67	3
13102-KWN-903	67	3
13102-KWN-P00	67	3
13103-KWN-903	67	3
13103-KWN-P00	67	3
13104-KWN-903	67	3
13104-KWN-P00	68	3
13105-KWN-903	67	3
13105-KWN-P00	68	3
13111-KWN-900	68	4
13115-GN5-910	68	5
14000		
14100-K35-J00	47	2
14100-K77-V00	47	2
14321-KWN-900	47	3
14401-K97-T01	49	1
14401-KSS-931	49	1
14430-KZR-600	47	4
14440-KZR-600	47	5
14451-KZR-600	47	6
14510-KZR-600	49	2
14520-K40-F01	49	3
14520-KZR-602	49	3
14531-KZR-600	49	4
14560-KZR-600	49	5
14611-K97-T00	49	6
14611-KWN-900	49	6
14711-KWN-900	47	7
14721-KWN-900	47	8
14751-KWN-900	47	9
14751-KZR-601	47	9
14771-KWN-900	47	10
14775-KZR-600	47	11
14781-MA6-000	47	12
15000		
15010-KWN-900	53	1
15133-KWN-900	53	2
15421-107-000	65	7
15421-KPL-900	65	7
15426-KVB-900	65	8
15651-KZR-600	63	9
16000		
16016-K03-H11	69	1
16075-KZR-601	69	2
16077-KVB-S51	69	3
16081-KYJ-901	69	4
16169-GGZ-J01	69	5
16400-K60-B01	69	6
16400-K60-B61	69	6
16410-K60-B01	69	7
16410-K60-B61	69	7
16450-K18-961	69	8
16450-KZR-B21	69	8
16472-KPC-D50	69	9
16480-KVB-S51	69	10
16485-GGZ-J01	69	11
16700-K2V-N31	118	1
16700-K60-B21	117	1
16700-K60-B61	118	1
16706-K0J-N01	118	2
16706-K81-N01	117	2
	118	2
16706-KVB-S51	117	2
	118	2
16707-K0J-N01	118	3
16707-KZR-601	117	3
	118	3
17000		
17111-K60-B00	45	4
17119-KWN-710	45	5
17208-GR1-010	120	1
17210-K60-B60	120	18
17213-KZR-600	120	2
17215-KWN-980	120	3
17218-K59-A10	120	4
17220-K2V-N30	120	5
17220-K59-A10	120	5
17225-KWN-980	120	6
17234-KCW-871	120	7
17236-KVB-900	120	7
17245-KZR-600	120	8
17253-K60-B00	120	9
17256-KWZ-900	120	10
17261-KVB-T00	120	11
17505-K59-A70	118	4
17510-K59-A10	117	4
	118	5
17517-GGL-J00	117	5
	118	6
17518-GHB-601	117	6
	118	7
17518-GHB-602	117	6
	118	7
17525-KBN-900	118	8
17526-K59-A10	117	7
17526-K59-T10	118	9
17527-KZR-600	117	8
17533-K60-B00	45	6
17533-K60-B60	45	6
17565-KZR-650	69	12
17570-K60-B01	117	9
17570-K60-B71	118	10
17572-GHB-601	117	10
	118	11
17572-GHB-602	117	10
	118	11
17575-K59-A10	117	11
17575-K59-A70	118	12
17620-K29-J00	118	13
17620-K29-J03	118	13
17620-KGH-600	117	12
17631-KEV-900	117	13
17632-383-831	118	14
17632-383-832	118	14
17910-K59-A11	75	1
17910-K59-A12	75	1
17910-K59-A71	77	1
17910-K59-A72	77	1
17913-K59-A10	75	2
	77	2
17920-K59-A11	75	3
17920-K59-A12	75	3
17920-K59-A71	77	3
17920-K59-A72	77	3
18000		
18240-K59-A10	121	1
	122	1
18291-GE2-921	121	2
	122	2
18293-KSB-900	121	3
18300-K2V-N30	122	3
18300-K60-B00	121	4
18300-K60-B60	122	3
18306-K59-A70ZA	122	4
18316-K50-T00	117	14
	122	5
18316-KVB-900	121	5
18318-K59-A10	121	6
18318-K59-A70	122	6
18345-K15-920	122	7
19000		
19037-KVB-902	56	3
19037-KVB-930	56	3
19037-KVB-931	56	3
19046-KVB-902	56	4
19046-KVB-930	56	4
19100-K60-B01	56	5
19100-K60-B02	56	5
19100-K60-B61	56	5
19100-K60-B62	56	5
19104-KVB-930	138	1
19109-GET-003	56	6
19109-KZR-602	56	6
19111-K59-A10	138	2
19112-K59-A10	138	3
19118-K59-A10	138	4
19150-K59-A10	56	7
19200-KWN-901	51	1
19210-K66-V00	51	13
19220-KWN-901	51	2
19226-KWN-900	51	3
19300-K59-A11	51	4
19332-KWN-900	56	8
19381-KWN-900	51	5
19416-KEY-900	56	9
19501-KZR-600	56	10
19502-KZR-600	56	11
19503-KWN-900	51	6
19504-KZR-600	56	12
19510-K60-B00	57	13
19510-K97-T00	57	13
19641-K59-A10	54	4
19641-K66-V00	55	3
19642-K59-A10	54	5
19642-K66-V00	55	4
19645-KWN-900	55	5
19748-K66-V00	55	6
19748-KZR-600	54	6
19749-KVY-900	54	7
21000		
21200-KZR-600	61	3
21395-KZR-600	61	4
22000		
22011-KWN-900	58	1
22100-KWN-900	59	1
22102-KZR-600	58	2
22105-KWN-900	58	3
22109-KZL-840	58	4
22110-K35-V00	58	5
22123-KWN-640	58	6
22131-KWN-900	58	7
22350-GFM-900	59	2
22350-K97-T01	59	2
22350-KVB-900	59	2
22361-KVB-900	59	3
22401-KVB-900	59	4
22535-K12-V00	59	5
22535-K35-V00	59	5
22804-148-000	59	6
23000		
23100-K35-V01	59	7
23205-K35-V00	59	8
23205-K59-A70	59	8
23224-K35-V00	59	9
23224-K60-B60	59	9
23225-KSY-900	59	10
23226-KVB-900	59	11
23233-K35-V00	59	12
23237-K35-V00	59	13
23238-KVB-900	59	14
23411-K60-B60	61	5
23411-KZR-601	61	5
23421-K59-A70	61	6
23421-KZR-600	61	6
23422-K66-V00	61	7
23422-KWN-900	61	7
23430-K59-A10	61	8
23430-K59-A70	61	8
28000		
28223-KZL-840	58	8
28230-KZR-600	58	9
28250-KZR-600	58	10
28253-KVB-900	58	11
28255-GS6-000	58	12
28281-KZL-C00	58	13
28300-KZR-600	123	1
30000		
30400-K2V-N32	135	1
30400-K60-B21	133	1
30400-K60-B71	134	1
30401-K59-A10	133	2
	134	2
30405-KZR-600	136	1
30510-K2V-N31	135	2
30510-K35-V01	133	3
	134	3
30515-K2V-N40	50	8
30515-K35-V00	50	3
30515-K60-B60	50	3
30520-GFM-900	133	4
	134	4
	135	3
30700-KWN-711	133	5
	134	5
	135	4

PART NO. INDEX

Part Number	Page	Ref.
30700-KWN-981	133	5
	134	5
	135	4
31000		
31210-K96-V01	52	1
31210-KZR-601	52	1
31220-K2V-N42	52	2
31220-K60-B02	52	2
31220-K60-B61	52	2
31500-KZR-602	131	1
	132	1
31926-KRM-841	45	7
31926-KYT-901	45	7
32000		
32100-K2V-N31	135	5
32100-K60-B00	133	6
32100-K60-B70	134	6
32101-K2V-N30	73	11
32101-K60-B00	72	1
32101-K60-B70	73	1
32101-KVB-N60	79	1
32102-K2V-N30	132	2
32102-K59-A10	131	2
32104-K59-A11	133	7
32112-KZR-600	65	9
32113-KWN-900	65	10
32605-K59-A70	134	7
32606-GEV-761	131	3
32920-KZR-901	127	1
32961-KWN-900	63	10
33000		
33100-K2V-N31	71	1
33100-K59-A71	71	1
33110-K59-A11	70	1
33113-K20-901	127	2
33150-K59-A11	70	2
33301-K07-901	127	3
	128	1
33412-KZZ-J00	125	1
33415-KZZ-J00	125	2
33452-KZZ-J00	125	3
33600-K59-A71	125	4
33650-K59-A71	125	5
33701-K59-A71	126	1
33710-K59-A11	127	4
33714-KL3-620	133	8
33720-K59-A11	128	2
33720-K59-A71	129	1
33721-K59-A11	128	3
33741-KAN-961	128	4
33741-MS6-921	129	2
33750-K59-A11	127	5
34000		
34905-GM9-003	127	6
34905-KAN-W01	70	3
	127	7
35000		
35100-K60-B61	137	22
35100-K60-B62	137	22
35101-K46-N01	136	2
35101-K97-A01	136	2
35110-K59-A12	136	3
35110-K60-B61	136	3
35121-K46-N00	136	4
35130-K60-B71	77	4
35130-K60-B72	77	4
35160-K27-V01	75	4
35170-K60-B01	75	5
35180-K47-N01	75	6
35190-K1A-N01	136	5
35190-K46-N02	136	5
35191-K27-V01	136	6
35200-K47-N01	75	7
35200-K59-A71	77	5
35340-K27-V01	77	6
35340-KPH-901	75	8
35340-KWB-601	79	2
35340-MGS-D31	80	1
35700-K0J-N01	123	15
35700-K1A-N01	123	15
35700-K59-A11	123	2
36000		
36532-K3A-V01	46	22
36532-K60-B01	45	8
36532-K60-B61	45	8
37000		
37100-K60-B01	72	2
37100-K60-B71	73	2
37100-K60-B72	73	2
37100-K60-B73	73	2
37202-K59-A11	72	3
37202-K59-A71	73	3
37203-K59-A71	73	4
37210-K60-B01	72	4
37210-K60-B71	73	5
37210-K60-B72	73	5
37211-K59-A11	72	5
37211-K59-A71	73	6
37212-K59-A11	72	6
37212-K60-B71	73	7
37213-K59-A71	73	6
37230-K60-B11	72	7
37700-K48-A01	65	11
37800-K60-B21	117	15
37800-K60-B61	118	15
37870-KZR-601	45	9
38000		
38110-K44-J01	134	8
38110-K47-M61	135	6
38110-KZR-601	133	9
38112-K41-N00	133	10
38301-K59-A71	73	8
38301-KPH-881	72	8
38301-KZR-C01	72	8
38306-K46-N01	72	9
38306-KJ6-740	72	9
38307-GJ1-014	72	10
38307-K16-901	72	10
38501-KVZ-631	131	4
	132	3
38501-KWN-901	131	4
	132	3
38502-K59-A11	131	5
	132	4
38502-KWN-901	131	5
	132	4
38941-K2F-N01	135	7
38950-K2P-V71	135	8
42000		
42311-KWN-900	114	1
42312-KVG-900	114	2
42650-K2V-N30ZA	113	12
42650-K59-A10ZA	112	2
42711-K59-A11	112	3
42711-K59-A12	112	3
42711-K59-A71	112	3
42711-K59-A72	112	3
42753-GM9-743	108	1
	110	1
	112	4
42753-K2S-N01	110	1
	112	4
42753-KBS-901	110	1
	112	4
42753-KWF-901	108	1
	110	1
	112	4
43000		
43141-KZR-600	112	5
43151-329-000	112	6
43352-568-003	106	3
43352-K59-A71	107	3
43353-461-771	106	4
43353-K59-A71	107	4
43410-KWN-900	112	7
43440-K60-B01	75	9
43440-K60-B61	77	7
43450-K60-B01	75	10
43450-K60-B61	77	8
43455-KWN-900	75	11
	77	9
43459-GN5-760	112	11
43472-KVB-900	112	8
44000		
44301-KVG-950	108	2
	110	2
44311-KVB-910	108	3
	110	3
44312-KZR-600	108	4
	110	4
44620-KVB-910	108	5
	110	5
44650-K2V-N30ZA	110	6
44650-K59-A10ZA	108	6
44711-K59-A11	108	7
44711-K59-A12	108	7
44711-K59-A71	110	7
44711-K59-A72	110	7
45000		
45108-K2F-T01	107	5
45108-K59-A71	107	5
45108-KVB-T01	106	5
45110-K59-A71	107	6
45111-K59-A71	107	7
45111-MAJ-G41	106	6
45113-K59-A71	107	8
45118-K59-A71	107	9
45126-K2V-N31	80	2
45126-K59-A11	79	3
45126-K59-A71	80	2
45131-GZ0-006	106	7
45132-166-016	106	8
45132-K59-A71	107	10
45133-MA3-006	106	9
45150-K2S-N01	107	11
45150-K59-A71	107	11
45150-KZL-A02	106	10
45156-K2V-N30	80	3
45156-K59-A70	80	3
45156-KZL-940	79	4
45157-K2V-N30	80	4
45157-KZL-940	79	5
	80	4
45190-KZL-A01	106	11
45215-K59-A71	107	12
45215-KPH-951	106	12
45216-166-006	106	13
45218-KWB-601	106	14
45351-K2V-N31	110	8
45351-K2V-N32	110	8
45351-K59-A72	110	8
45351-K81-N31	108	8
45351-K93-N01	108	8
45351-KVB-931	108	8
45351-KVB-S01	108	8
45351-KVB-S02	108	8
45351-KVY-961	108	8
45351-KZR-C01	108	8
45500-K2S-N01	80	5
45500-K59-A71	80	5
45500-KZR-711	79	6
45504-410-003	79	7
45504-K59-A71	80	6
45512-K59-A71	80	7
45512-MA6-006	79	8
45513-GW0-911	79	9
45513-K59-A71	80	8
45517-GW0-751	79	10
45517-K81-N30	77	10
	80	9
45518-K59-A71	80	10
45520-GW0-911	79	11
45520-K59-A71	80	11
45521-GW0-911	79	12
45530-K59-A71	80	12
45530-KVY-911	79	13
50000		
50100-K2V-N31	136	7
50100-K59-A11	136	7
50100-K59-A70	136	7
50186-K59-A70ZA	129	3
50301-GN5-901	85	3
50302-GN5-900	85	4
50306-GN5-900	85	5
50350-K59-A10	136	8
50352-K59-A10	136	9
50500-K59-A10	123	3
50503-KWN-900	123	4
50520-KVB-900	123	5
50530-K2V-N30	123	16
50530-K59-A10	123	6
50530-K59-A70	123	6
50710-KWB-600	97	1
50711-KBP-900	97	2
50712-KBP-900	97	3
50715-KE8-000	97	4
51000		
51400-K2V-N31	104	1
51400-K59-A71	104	1
51400-KZR-601	104	1
51401-K0J-N01	104	2
51401-KZR-601	104	2
51410-K0J-N01	104	3
51410-KZL-A01	104	3
51412-GN5-901	104	4
51412-KWB-601	104	5
51420-K59-A71	104	6
51420-K81-N01	104	6
51420-KZR-601	104	6
51425-GN5-901	104	7
51437-KWB-601	104	8
51454-K58-TC1	104	9
51454-KEV-881	104	9
51456-KPH-901	104	10
51466-065-901	104	11
51470-K2S-N01	104	12
51470-K81-N01	104	12
51470-KZR-601	104	12
51490-KGH-901	104	13
51500-K2V-N31	104	14
51500-K59-A71	104	14
51500-KZR-601	104	14
51520-K59-A71	105	15
51520-K81-N01	105	15
51520-KZR-601	104	15
52000		
52100-K59-A70	114	3
52100-KZR-C00	114	3
52400-K59-A11	124	1
52485-KVY-901	124	2
53000		
53100-K59-A10	82	1
53100-K59-A70	83	1
53102-K59-A70	83	2
53102-KVB-S00	82	2
53140-K44-V00	75	12
53140-K59-A70	77	11
53166-KWB-600	75	13
	77	12
53167-K66-V00	75	14
53168-K66-V00	75	15
53172-K25-910	75	16
53172-K2S-N00	77	13
53172-K59-A70	77	13
53173-GFM-900	75	17
53173-K0J-N00	77	14
53173-K81-N30	77	14
53173-KVB-920	75	18
53175-K59-A71	80	13
53175-KVG-A21	79	14
53176-GBL-870	75	19
53178-K2S-N00	77	15
53178-K59-A10	76	20
53178-K81-N30	77	15
53180-K25-600	76	21
53184-K59-A70	78	16
53185-K1A-N00	78	28
53185-K25-910	76	22
53185-K81-N30	78	17
53186-GBL-870	76	23
53186-K81-N30	78	18
53188-K81-N30	78	19

PART NO. INDEX

Part Number	Page	Ref.
53188-KVB-920	76	24
53198-GBL-870	79	15
53198-K59-A71	80	14
53199-K59-A71	80	15
53199-KVG-910	79	16
53201-K59-A10ZA	82	3
53205-K2V-N30ZA	84	16
53205-K59-A10ZB	82	4
53206-K60-B00ZB	82	5
53208-K59-A70YB	83	3
53208-K59-A70YJ	83	3
53208-K59-A70ZC	83	3
53208-K59-A70ZR	83	3
53208-K59-A70ZS	83	3
53208-K59-A70ZT	83	3
53208-K59-A70ZU	83	3
53211-GN5-900	85	6
53212-GN5-900	85	7
53214-GN5-900	85	8
53216-GN5-830	85	9
53219-K59-A10	85	10
53219-K59-A70	85	10
53220-GN5-900	85	11
53280-K2V-N30ZA	83	4
53280-K59-A70ZB	83	4
53280-K60-B00ZD	82	6
53290-K2V-H20ZA	84	17
53290-K2V-H20ZB	84	17
53290-K2V-H20ZC	84	17
53290-K2V-H20ZD	84	17
53290-K2V-H20ZE	84	17
53290-K59-A70ZA	83	5
61000		
61105-KEV-900	134	9
61106-KW6-840	134	10
61110-K2V-H20ZA	86	3
61110-K2V-H20ZB	86	3
61110-K2V-H20ZC	86	3
61110-K2V-H20ZD	86	3
61110-K2V-H20ZE	86	3
61110-K2V-N10ZA	86	3
61110-K2V-N10ZB	86	3
61110-K2V-N10ZC	86	3
61110-K2V-N10ZE	86	3
61110-K2V-N10ZG	86	3
61110-K59-A70ZA	86	3
61110-K59-A70ZB	86	3
61110-K59-A70ZJ	86	3
61110-K59-A70ZN	86	3
61110-K59-A80ZD	86	3
61110-K59-A80ZE	86	3
61110-K59-A80ZF	86	3
61110-K59-HA0ZA	86	3
61110-K59-HA0ZB	86	3
61110-K59-HA0ZC	86	3
61110-K59-HA0ZD	86	3
61110-K60-H40ZB	86	1
61110-K60-H40ZC	86	1
61110-K60-H40ZD	86	1
64000		
64200-K2V-H20ZA	92	1
64200-K2V-H20ZB	92	1
64200-K2V-H20ZC	92	1
64200-K2V-H20ZD	92	1
64200-K2V-H20ZE	92	1
64200-K60-H50ZE	89	1
64216-GJ2-730	136	10
64223-K2V-N30	137	25
64223-K60-B70	137	23
64223-K60-T00	136	11
64300-K2V-H20ZA	92	2
64300-K2V-H20ZB	92	2
64300-K2V-H20ZC	92	2
64300-K2V-H20ZD	92	2
64300-K2V-H20ZE	92	2
64300-K60-H40ZA	87	1
64300-K60-H40ZB	87	1
64300-K60-H40ZC	87	1
64300-K60-H40ZD	87	1
64301-K59-A70YB	89	2
64301-K59-A70YK	89	2
64301-K59-A70ZC	89	2
64301-K59-A70ZK	89	2
64301-K59-A70ZN	89	2
64301-K59-A70ZT	89	2
64301-K59-A70ZU	89	2
64302-K60-T00ZP	87	2
64303-K2V-N30ZA	92	3
64303-K59-A10ZA	87	3
64303-K59-A70ZD	89	3
64308-K2V-N30ZA	96	1
64308-K59-A10ZB	94	1
64308-K59-A70ZB	95	1
64310-K2V-N30ZA	96	2
64310-K59-A10ZB	94	2
64310-K59-A70ZB	95	2
64320-K2V-N30ZA	92	4
64320-K59-A70ZD	95	3
64330-K59-A70ZC	89	4
64340-K59-A10ZB	94	3
64340-K59-A70ZB	95	4
	96	3
64350-K60-B60ZB	99	1
	102	1
64360-K60-B60ZB	99	2
	102	2
64420-K2V-N30ZA	92	5
64420-K59-A70ZD	95	5
64430-K59-A70ZC	89	5
64460-K59-A10ZB	94	4
64460-K59-A70ZB	95	6
	96	4
64500-K2V-H00ZA	90	6
64500-K2V-H00ZB	90	6
64500-K2V-H00ZC	90	6
64500-K2V-H00ZD	90	6
64500-K2V-H00ZE	90	6
64500-K2V-H20ZA	92	6
64500-K2V-H20ZB	92	6
64500-K2V-H20ZC	92	6
64500-K2V-H20ZD	92	6
64500-K2V-H20ZE	92	6
64500-K60-H40ZA	87	4
64500-K60-H40ZB	87	4
64500-K60-H40ZD	87	4
64500-K60-H40ZE	87	4
64500-K60-H50ZA	89	6
64500-K60-H50ZB	89	6
64500-K60-H50ZC	89	6
64500-K60-H50ZD	89	6
64500-K60-H70ZA	89	6
64500-K60-H70ZB	89	6
64500-K60-H70ZC	89	6
64500-K60-H70ZD	90	6
64500-K60-HA0ZA	90	6
64500-K60-HA0ZB	90	6
64500-K60-HA0ZC	90	6
64500-K60-HA0ZD	90	6
64600-K2V-H00ZA	90	7
64600-K2V-H00ZB	90	7
64600-K2V-H00ZC	90	7
64600-K2V-H00ZD	90	7
64600-K2V-H00ZE	90	7
64600-K2V-H20ZA	92	7
64600-K2V-H20ZB	93	7
64600-K2V-H20ZC	93	7
64600-K2V-H20ZD	93	7
64600-K2V-H20ZE	93	7
64600-K60-H40ZA	87	5
64600-K60-H40ZB	87	5
64600-K60-H40ZD	87	5
64600-K60-H40ZE	87	5
64600-K60-H50ZA	90	7
64600-K60-H50ZB	90	7
64600-K60-H50ZC	90	7
64600-K60-H50ZD	90	7
64600-K60-H70ZA	90	7
64600-K60-H70ZB	90	7
64600-K60-H70ZC	90	7
64600-K60-H70ZD	90	7
64600-K60-HA0ZA	90	7
64600-K60-HA0ZB	90	7
64600-K60-HA0ZC	90	7
64600-K60-HA0ZD	90	7
77000		
77115-K59-A70	115	1
77115-KZR-600	115	1
77200-K59-A10	115	2
77200-K59-A30	115	2
77200-K59-A70	115	2
77200-K59-H10	115	2
77215-KW7-900	115	3
77215-KZL-930	115	4
77230-K59-A10	115	5
77234-KYZ-900	115	6
77237-K59-A10	115	7
77237-K59-A70	116	21
77240-K59-A11	115	8
77240-K59-A12	115	8
80000		
80100-K59-A10	128	5
80100-K59-T10ZA	129	4
80101-K59-A70	129	5
80102-K59-A10	128	6
	129	6
80103-K59-A70ZB	129	7
80104-K59-A10	128	7
	129	8
80104-K59-A70	129	9
80105-K59-A10	136	12
80106-K59-A10	128	8
	129	10
80106-K59-A70	137	24
80108-KZR-600	128	9
	129	11
80110-K59-A10ZA	128	10
80151-K2V-N30ZA	102	3
80151-K59-A10ZB	98	1
80151-K59-A70ZD	99	3
81000		
81130-K2V-N30ZA	93	8
81131-K2V-N30ZA	93	9
81131-K2V-N30ZB	93	9
81131-K2V-N30ZC	93	9
81131-K2V-N30ZD	93	9
81131-K2V-N30ZE	93	9
81131-K59-A10ZJ	87	6
81131-K59-A70YA	91	8
81131-K59-A70ZK	91	8
81131-K59-A70ZN	91	8
81131-K59-A70ZT	91	8
81131-K59-A70ZU	91	8
81132-GAH-000YV	87	7
	91	9
	93	10
81132-K2V-N30	93	11
81136-K2V-N30	93	12
81137-K2C-V01	93	13
81141-K2V-N30ZA	93	14
81141-K59-A10ZB	87	8
81141-K60-B60ZA	91	10
81250-K59-A10	115	9
81250-K59-A70	115	9
81255-K2V-N30	132	5
81255-K59-A10	131	6
81255-K59-A70	131	6
83000		
83450-K2V-H00ZA	99	4
83450-K2V-H00ZB	99	4
83450-K2V-H00ZC	99	4
83450-K2V-H00ZD	99	4
83450-K2V-H00ZE	99	4
83450-K2V-H20ZA	102	4
83450-K2V-H20ZB	102	4
83450-K2V-H20ZC	102	4
83450-K2V-H20ZD	102	4
83450-K2V-H20ZE	102	4
83450-K60-H40ZA	98	2
83450-K60-H40ZB	98	2
83450-K60-H40ZD	98	2
83450-K60-H40ZE	98	2
83450-K60-H50ZA	99	4
83450-K60-H50ZB	99	4
83450-K60-H50ZC	99	4
83450-K60-H50ZD	99	4
83450-K60-H70ZA	99	4
83450-K60-H70ZB	99	4
83450-K60-H70ZC	99	4
83450-K60-H70ZD	99	4
83450-K60-HA0ZA	99	4
83450-K60-HA0ZB	99	4
83450-K60-HA0ZC	99	4
83450-K60-HA0ZD	99	4
83450-K60-HA0ZE	99	4
83520-K2V-N30ZA	102	5
83520-K59-A10ZB	98	3
83520-K59-A70ZB	99	5
83550-K2V-H00ZA	100	6
83550-K2V-H00ZB	100	6
83550-K2V-H00ZC	100	6
83550-K2V-H00ZD	100	6
83550-K2V-H00ZE	100	6
83550-K2V-H20ZA	102	6
83550-K2V-H20ZB	102	6
83550-K2V-H20ZC	102	6
83550-K2V-H20ZD	102	6
83550-K2V-H20ZE	102	6
83550-K60-H40ZA	98	4
83550-K60-H40ZB	98	4
83550-K60-H40ZD	98	4
83550-K60-H40ZE	98	4
83550-K60-H50ZA	99	6
83550-K60-H50ZB	100	6
83550-K60-H50ZC	100	6
83550-K60-H50ZD	100	6
83550-K60-H70ZA	100	6
83550-K60-H70ZB	100	6
83550-K60-H70ZC	100	6
83550-K60-H70ZD	100	6
83550-K60-HA0ZA	100	6
83550-K60-HA0ZB	100	6
83550-K60-HA0ZC	100	6
83550-K60-HA0ZD	100	6
83620-K2V-N30ZA	102	7
83620-K59-A10ZB	98	5
83620-K59-A70ZB	100	7
83750-K59-A10ZM	98	6
83750-K59-A70ZC	102	8
83750-K59-A70ZD	100	8
83750-K59-A70ZH	100	8
83750-K59-A70ZJ	100	8
83750-K59-A70ZK	100	8
83750-K59-A70ZL	100	8
83750-K59-A70ZS	102	8
83750-K59-A70ZT	102	8
83750-K59-A70ZU	102	8
83750-K59-A70ZV	103	8
84000		
84100-K59-A10ZE	115	10
84100-K59-A70ZH	115	10
84100-K59-A70ZJ	115	10
84100-K59-A70ZK	115	10
84601-HA7-670	57	14
86000		
86101-K2V-H20ZA	148	1
86101-K2V-H20ZB	148	1
86101-K2V-H20ZC	148	1
86101-K2V-H20ZD	148	1
86101-K2V-H20ZE	148	1
86101-K93-N00ZE	144	1
86101-KZR-600ZB	142	1
86102-KZR-700ZA	144	2
	148	2
86150-GFC-890	83	6
86150-GFC-901	83	6
86150-GFC-902	83	6
86150-KPG-901	82	7
	83	6
86150-KPG-902	82	7
	83	6
86150-KTJ-C60	82	7
	83	6
86150-KYS-940	83	6
86170-KZR-600	142	2
	144	3
	148	3
86531-KYZ-710ZA	142	3
	144	4
	148	4
86611-K2V-H20ZA	148	5
86611-K2V-H20ZB	148	5
86611-K2V-H20ZC	148	5
86611-K2V-H20ZD	148	5
86611-K2V-H20ZE	148	5
86611-K2V-N10ZA	144	5
86611-K59-A00ZD	142	4
86611-K59-A00ZE	142	4
86611-K59-A70ZA	144	5
86611-K59-A70ZB	144	5
86611-K59-A70ZJ	144	5

PART NO. INDEX

Part Number	Page	Ref.
86611-K59-A70ZL	144	5
86611-K59-A80ZE	144	5
86611-K59-A80ZF	144	5
86611-K59-A80ZG	144	5
86611-K60-H40ZA	142	4
86641-K2V-H00ZA	146	21
86641-K2V-H00ZB	146	21
86641-K2V-H00ZC	146	21
86641-K2V-H00ZD	146	21
86641-K2V-H00ZE	146	21
86641-K60-H40ZA	142	5
86641-K60-H40ZB	142	5
86641-K60-H40ZC	142	5
86641-K60-H40ZD	142	5
86641-K60-H50ZA	144	6
86641-K60-H50ZB	144	6
86641-K60-H50ZC	144	6
86641-K60-H50ZD	144	6
86641-K60-H70ZA	145	11
86641-K60-H70ZB	145	11
86641-K60-H70ZC	145	11
86641-K60-H70ZD	145	11
86641-K60-HA0ZA	145	16
86641-K60-HA0ZB	145	16
86641-K60-HA0ZC	145	16
86641-K60-HA0ZD	145	16
86642-K2V-H00ZA	146	22
86642-K2V-H00ZB	146	22
86642-K2V-H00ZC	146	22
86642-K2V-H00ZD	146	22
86642-K2V-H00ZE	146	22
86642-K2V-H20ZA	148	6
86642-K2V-H20ZB	148	6
86642-K2V-H20ZC	148	6
86642-K2V-H20ZD	148	6
86642-K2V-H20ZE	148	6
86642-K60-H40ZA	142	6
86642-K60-H40ZB	142	6
86642-K60-H40ZC	142	6
86642-K60-H40ZD	142	6
86642-K60-H50ZA	144	7
86642-K60-H50ZB	144	7
86642-K60-H50ZC	144	7
86642-K60-H50ZD	144	7
86642-K60-H70ZA	145	12
86642-K60-H70ZB	145	12
86642-K60-H70ZC	145	12
86642-K60-H70ZD	145	12
86642-K60-HA0ZA	145	17
86642-K60-HA0ZB	145	17
86642-K60-HA0ZC	145	17
86642-K60-HA0ZD	145	17
86643-K2V-H00ZA	146	23
86643-K2V-H00ZB	146	23
86643-K2V-H00ZC	146	23
86643-K2V-H00ZD	146	23
86643-K2V-H00ZE	146	23
86643-K2V-H20ZA	148	7
86643-K2V-H20ZB	148	7
86643-K2V-H20ZC	148	7
86643-K2V-H20ZD	148	7
86643-K2V-H20ZE	149	7
86643-K60-H40ZA	142	7
86643-K60-H40ZB	142	7
86643-K60-H40ZC	142	7
86643-K60-H40ZD	142	7
86643-K60-H50ZA	144	8
86643-K60-H50ZB	145	8
86643-K60-H50ZC	145	8
86643-K60-H50ZD	145	8
86643-K60-H70ZA	145	13
86643-K60-H70ZB	145	13
86643-K60-H70ZC	145	13
86643-K60-H70ZD	145	13
86643-K60-HA0ZA	145	18
86643-K60-HA0ZB	145	18
86643-K60-HA0ZC	145	18
86643-K60-HA0ZD	145	18
86644-K2V-H00ZA	147	24
86644-K2V-H00ZB	147	24
86644-K2V-H00ZC	147	24
86644-K2V-H00ZD	147	24
86644-K2V-H00ZE	147	24
86644-K2V-H20ZA	149	8
86644-K2V-H20ZB	149	8
86644-K2V-H20ZC	149	8
86644-K2V-H20ZD	149	8
86644-K2V-H20ZE	149	8
86644-K60-H40ZA	142	8
86644-K60-H40ZB	142	8
86644-K60-H40ZC	142	8
86644-K60-H40ZD	143	8
86645-K2V-H20ZA	149	9
86645-K2V-H20ZB	149	9
86645-K2V-H20ZC	149	9
86645-K2V-H20ZD	149	9
86645-K2V-H20ZE	149	9
86646-K2V-H20ZA	149	10
86646-K2V-H20ZB	149	10
86646-K2V-H20ZC	149	10
86646-K2V-H20ZD	149	10
86646-K2V-H20ZE	149	10
86647-K2V-H20ZA	149	11
86647-K2V-H20ZB	149	11
86647-K2V-H20ZC	149	11
86647-K2V-H20ZD	149	11
86647-K2V-H20ZE	149	11
86811-K20-900ZB	143	9
86831-K2V-H00ZA	147	25
86831-K2V-H00ZB	147	25
86831-K2V-H00ZC	147	25
86831-K2V-H00ZD	147	25
86831-K2V-H00ZE	147	25
86831-K60-H40ZA	143	10
86831-K60-H40ZB	143	10
86831-K60-H40ZC	143	10
86831-K60-H40ZD	143	10
86831-K60-H50ZA	145	9
86831-K60-H50ZB	145	9
86831-K60-H50ZC	145	9
86831-K60-H50ZD	145	9
86831-K60-H70ZA	145	14
86831-K60-H70ZB	145	14
86831-K60-H70ZC	145	14
86831-K60-H70ZD	145	14
86831-K60-HA0ZA	145	19
86831-K60-HA0ZB	146	19
86831-K60-HA0ZC	146	19
86831-K60-HA0ZD	146	19
86832-K2V-H00ZA	147	26
86832-K2V-H00ZB	147	26
86832-K2V-H00ZC	147	26
86832-K2V-H00ZD	147	26
86832-K2V-H00ZE	147	26
86832-K2V-H20ZA	149	12
86832-K2V-H20ZB	149	12
86832-K2V-H20ZC	149	12
86832-K2V-H20ZD	149	12
86832-K2V-H20ZE	149	12
86832-K60-H40ZA	143	11
86832-K60-H40ZB	143	11
86832-K60-H40ZC	143	11
86832-K60-H40ZD	143	11
86832-K60-H50ZA	145	10
86832-K60-H50ZB	145	10
86832-K60-H50ZC	145	10
86832-K60-H50ZD	145	10
86832-K60-H70ZA	145	15
86832-K60-H70ZB	145	15
86832-K60-H70ZC	145	15
86832-K60-H70ZD	145	15
86832-K60-HA0ZA	146	20
86832-K60-HA0ZB	146	20
86832-K60-HA0ZC	146	20
86832-K60-HA0ZD	146	20
86833-K2V-H20ZA	149	13
86833-K2V-H20ZB	149	13
86833-K2V-H20ZC	149	13
86833-K2V-H20ZD	149	13
86833-K2V-H20ZE	149	13
87000		
87504-K59-H00	140	1
	141	1
87505-K0J-N00	141	7
87505-K81-H20	140	2
87505-K81-M00	141	2
87506-KGH-970	140	3
87509-K72-630	141	8
87509-KWP-900	141	3
87509-KWW-A40	140	4
87514-K2S-N00	141	9
87514-K50-M00	140	5
87514-K93-A00	141	4
87560-KVB-860	140	6
	141	5
87586-KYT-860	140	7
	141	6
88000		
88114-KVB-900	74	1
88115-KWN-980	74	7
88115-KZR-600	74	2
88116-KZR-600	74	3
88210-K59-A70	74	8
88210-KZR-600	74	4
88220-K59-A70	74	9
88220-KZR-600	74	5
89000		
89102-538-000	139	1
89103-538-000	139	2
89216-KVY-960	139	3
90000		
90001-KWR-000	52	3
	54	8
	55	7
	65	12
	128	11
	129	12
90002-KWB-600	47	13
90003-KWN-900	53	3
90003-MY5-720	74	10
90004-GHB-660	57	15
	69	13
90004-KGF-910	45	10
90005-KY7-000	49	7
90012-KWB-600	47	14
90013-K66-V00	44	3
90031-KWN-900	63	11
90032-KWN-900	65	13
90036-KZR-600	63	12
90083-KVB-900	47	15
90101-K2F-N00	93	15
90101-MT4-000	136	13
90102-KZL-930	82	8
	83	7
90103-GET-003	57	16
90103-KEZ-900	115	11
90103-KZR-602	57	16
90104-K81-N30	78	20
90104-KPH-900	94	5
	95	7
	96	5
90105-KGH-900	108	9
90105-KVY-900	136	14
90105-KZZ-900	110	9
90105-MG9-000	82	9
90106-GCC-C50	136	15
90107-KGH-600	100	9
	103	9
90107-KVB-900	87	9
	91	11
	93	16
90108-KZL-860	123	7
90111-162-000	115	12
90111-MR5-000	136	16
90112-KVB-900	112	9
90113-K15-920	122	8
90114-K59-A71	80	16
90114-KVG-911	79	17
90115-K1A-N00	78	21
90115-K81-N30	78	21
90115-KWN-900	76	25
	78	22
90116-K0A-E11	93	17
90116-K81-N30	78	22
90116-KV3-701	105	16
90116-KVB-900	86	2
	129	13
	136	17
90116-SP0-003	95	8
	96	6
90117-KVG-A20	70	4
	71	2
		5
	98	7
	127	8
	129	14
90118-GFM-900	76	26
90131-883-000	63	13
90131-KPH-880	106	15
	107	13
90133-K59-A70	91	12
	93	18
90133-SV4-003	91	12
	93	18
90145-GAZ-981	80	17
90145-KPH-B30	79	18
	80	17
90147-KVB-900	123	17
90147-KVY-900	123	8
90161-KZR-600	115	13
90164-KZL-A00	136	18
90191-KWB-600	82	10
	83	8
90201-MW3-620	74	11
90202-KN7-670	59	15
90203-KVB-900	123	9
90206-001-000	47	16
90301-KWN-901	129	15
90301-KZR-600	74	6
90302-GW3-980	127	9
90302-KVB-T01	76	27
	78	23
90302-KWW-A00	82	11
	84	9
	87	10
	91	13
	93	19
	94	6
	95	9
	96	7
	98	8
	100	10
	103	10
	128	12
	129	16
90304-KGH-901	82	12
	84	10
	137	19
90304-MJ0-920	121	7
	122	9
90305-GEE-710	120	12
90305-K66-V01	114	4
90305-KVB-901	114	4
90306-K66-V01	110	10
90306-KGH-901	108	10
	110	10
90314-KVS-F22	72	11
	73	9
90344-KRB-900	91	14
	93	20
90401-KWN-900	58	19
90412-KZL-840	58	14
90426-KVB-900	58	15
90439-443-740	58	16
90439-KWZ-900	52	4
90441-GY6-940	59	16
90463-ML7-000	50	4
90483-KWN-900	45	11
90495-MN5-000	61	9
	65	14
90501-KPH-880	82	13
	84	11
90505-KPH-880	82	14
	84	12
90544-283-000	105	17
90545-300-000	79	19
	80	18
90601-K27-V01	57	17
90602-K27-V01	57	19
90605-166-720	59	17
90651-K14-A31	93	21
90651-K59-A71	80	19
90651-KZR-601	114	5
90651-MA5-671	79	20
90652-KT1-771	133	15
	134	11
	135	9
90652-KVB-900	54	9
	55	8
90656-GCC-000ZE	116	14
90666-K59-A11	82	15
	84	13
	88	11
	91	15
	93	22
	95	10

PART NO. INDEX

Part Number	Page	Ref.
90666-K59-A11	96	8
	101	11
	103	11
90666-SDA-A01	82	15
	84	13
	88	11
	91	15
	93	22
		23
	95	10
	96	8
	101	11
	103	11
90677-KAN-T00	70	5
	71	3
	88	12
	91	16
	93	24
	94	7
	95	11
	96	9
	101	12
	103	12
	126	2
	128	13
	129	17
90678-MR1-690	57	17
90683-GAZ-003	128	14
	129	18
90701-GGZ-J01	57	19
90701-KWN-901	51	7
	57	18
90701-MF5-003	57	19
90702-KWN-900	63	14
90741-003-010	68	6
91000		
91001-KCW-003	59	18
91002-GA7-701	60	19
91002-KZR-602	65	15
91002-KZR-603	65	15
91003-KZR-601	66	16
91003-KZR-602	66	16
91004-GGC-G01	60	19
91004-KZR-601	61	10
91004-KZR-602	61	10
91005-KVB-900	54	10
	55	9
91005-KZR-601	66	17
91005-KZR-602	66	17
91006-KAB-004	61	11
91006-KZR-601	61	12
91006-KZR-602	61	12
91008-KZR-601	66	18
91008-KZR-602	66	18
91009-K93-T01	60	19
91009-KVY-961	60	19
91009-KWN-901	61	11
91051-K35-V01	114	6
91051-K35-V02	114	6
91051-K35-V03	114	6
91051-K35-V04	114	6
91052-K03-N41	108	11
	110	11
91052-K24-901	108	11
	110	11
91052-K24-902	109	11
	110	11
91052-K24-903	109	11
	111	11
91052-K24-904	109	11
	111	11
91109-GGC-G01	60	18
91109-KVY-902	59	18
91201-434-003	61	13
91201-K35-J01	63	15
91201-K59-A11	63	15
91202-KWN-901	66	19
91203-K35-J01	66	20
91203-K35-V01	58	20
91203-K50-T01	66	20
91204-K35-J01	61	14
91204-K59-A11	62	14
91211-K97-T01	60	20
91211-KN7-671	60	20
91212-K44-V01	54	11
91251-KZR-601	109	12
	111	12
91252-KZR-601	114	7
91253-KZR-601	114	8
91256-166-003	105	18
91301-GGL-J01	69	14
91301-KRJ-901	45	12
91302-001-020	66	21
91302-KWN-900	51	8
91303-MKH-D21	66	25
91306-MG3-000	49	8
91307-035-000	63	16
91307-PLC-004	45	13
91356-GM0-003	105	18
91384-KVB-900	60	21
91422-KVB-900	82	16
91504-SL0-003	50	7
91509-GE2-760	88	13
	91	17
	93	25
	126	3
	128	15
	129	19
	138	5
91771-MKK-H11	132	6
92000		
92101-06020-4J	133	11
	134	12
	135	10
93000		
93401-06020-00	76	28
93401-06025-08	57	20
93404-06012-00	45	14
	94	8
	95	12
	96	10
	116	15
	117	16
	118	16
	128	16
	129	20
93404-06016-00	70	6
	71	4
	117	17
93411-05025-00	125	6
93500-05012-1H	76	29
93500-05020-0A	76	30
93600-04012-1G	79	21
93600-04016-1G	80	20
93892-05012-18	69	15
93892-05020-07	78	24
93893-04012-17	79	22
	81	21
93901-24320	137	20
93901-34310	127	10
93903-24310	82	17
	88	14
	91	18
	94	9
	95	13
	96	11
	98	9
	101	13
	116	16
93903-24380	82	18
	84	14
	88	15
	93	26
	95	14
	96	12
	98	10
	101	14
	103	13
	116	16
	128	17
	129	21
93903-24480	84	18
	116	17
	119	17
	130	22
93903-25310	72	12
	73	10
	127	11
	128	18
93903-25480	120	13
93903-34120	54	12
93903-34220	54	13
	55	10
93903-34310	91	19
	93	27
93903-34410	91	20
93903-35210	93	28
93903-35280	130	23
93903-35380	84	15
94000		
94021-10000-0S	124	3
94030-08280	45	15
94030-12200	60	22
94030-14200	58	17
94050-06000	79	23
	81	22
	117	18
	119	18
94050-06070	81	22
94050-12000	52	5
94101-06000	97	5
	121	8
	122	10
94101-08000	116	18
94101-10000	114	9
	124	4
94101-10800	123	10
94109-12000	63	17
94201-16150	97	6
94201-16180	116	19
94201-30200	123	11
94301-08100	51	9
	53	4
	63	18
94301-08140	54	14
	55	11
94301-10120	62	15
94301-10160	45	16
	50	5
94303-03050	46	20
94511-16000	58	18
94520-28000	60	23
94520-40000	114	5
94540-03010	78	25
95000		
95002-02100	138	6
95002-02130	120	14
95002-41050-08	57	21
95002-41200-08	120	15
95002-50000	62	16
95002-80000	66	22
	120	16
95011-61000	123	12
95014-72102	123	13
95015-32001	112	10
95015-42000	112	11
95015-81000	97	7
95701-06010-00	94	10
95701-06012-00	76	31
	78	26
	79	24
	81	23
	95	15
	96	13
	116	20
	117	19
	119	19
	133	12
	134	13
	135	11
95701-06012-07	130	24
95701-06014-00	45	17
	50	6
	133	13
	134	14
	135	12
95701-06016-00	57	22
	66	23
	133	14
	134	15
	135	13
95701-06020-00	51	10
95701-06022-00	43	3
	49	9
	51	10
	79	25
95701-06025-00	63	19
	120	17
95701-06040-00	46	18
	51	11
95701-06065-00	63	20
95701-06080-00	63	21
95701-06095-00	46	19
95701-06130-00	64	22
95701-08016-00	66	24
95701-08025-00	123	14
95701-08045-00	62	17
95701-08055-00	62	18
95701-10040-00	114	10
95701-10065-07	121	9
	122	11
95801-06016-02	121	10
	122	12
95801-08032-00	124	5
95801-08045-08	137	21
95801-10045-08	85	12
96000		
96001-06008-00	121	11
	122	13
96001-06016-00	51	12
	64	23
96001-06016-07	57	23
96001-06022-07	78	27
	81	24
96001-06025-00	69	16
96001-06028-00	54	15
	55	12
96001-06040-00	54	16
	55	13
96001-06065-00	54	17
	55	14
96001-06080-00	46	21
96700-06025-00	52	6
98000		
98200-40750	132	7
98200-41000	131	7
	132	8
98200-42500	131	8
	132	9

PART NAME INDEX

Part name	Page	Ref.
[A]		
ARM ASSY., KICK STARTER	123	1
ARM COMP., EX. VALVE ROCKER	47	5
ARM COMP., IN. VALVE ROCKER	47	4
ARM COMP., RR. BRAKE LOCK	76	22
ARM, RR. BRAKE	112	7
AXLE, FR. WHEEL	108	2
	110	2
[B]		
BALL SET, STEEL, #6X23	85	1
BALL SET, STEEL, #6X29	85	2
BAND, AIR CLEANER CONNECTING TUBE	120	10
BAND, HANDLE BRACKET	75	18
BAND, WIRE	133	15
	134	11
	135	9
BAR COMP., SIDE STAND	123	6
	16	
BAR, L. PILLION STEP	97	3
BAR, R. PILLION STEP	97	2
BASE COMP., RR. COMBINATION	127	4
BASE SET, LICENSE LIGHT	128	10
BASE, STATOR	63	7
BATTERY	131	1
	132	1
BEARING COMP.	54	10
	55	9
BEARING, NEEDLE, 20X29X18	59	18
	60	18
BEARING, RADIAL BALL	108	11
	109	11
	110	11
	111	11
BEARING, RADIAL BALL SPECIAL, 6207	65	15
BEARING, RADIAL BALL, 6205-2NSG	61	11
BEARING, RADIAL BALL, 6201	61	12
BEARING, RADIAL BALL, 6202	61	10
BEARING, RADIAL BALL, 6203UU	114	6
BEARING, RADIAL BALL, 6203UU L	114	6
BEARING, RADIAL BALL, 6204	66	16
BEARING, RADIAL BALL, 6205UU	61	11
BEARING, RADIAL BALL, 6301	66	17
BEARING, RADIAL BALL, 6302	66	18
BEARING, RADIAL BALL, 6902U	60	19
BELT, DRIVE	59	7
BODY COMP., FRAME	136	7
BODY SET	69	7
BOLT-WASHER, 5X25	125	6
BOLT-WASHER, 6X12	45	14
	94	8
	95	12
	96	10
	116	15
BOLT-WASHER, 6X12	117	16
	118	16
	128	16
	129	20
BOLT-WASHER, 6X16	70	6
	71	4
	117	17
BOLT-WASHER, 6X20	76	28
BOLT-WASHER, 6X25	57	20
BOLT A, STUD, 8X200.5	63	11
BOLT B, STUD, 8X206	65	13
BOLT, ADAPTER, 10MM	74	2
		3
		10
BOLT, BRAKE DISK, 8X24	108	9
BOLT, DISK, 6X17	110	9
BOLT, DRAIN	57	16
BOLT, DRAIN PLUG, 12X15	63	13
BOLT, FLANGE, 10X238	136	15
BOLT, FLANGE, 10X270	136	14
BOLT, FLANGE, 10X40	114	10
BOLT, FLANGE, 10X45	85	12
BOLT, FLANGE, 10X48	82	8
	83	7
BOLT, FLANGE, 10X65	121	9
	122	11
BOLT, FLANGE, 5X12	47	13
BOLT, FLANGE, 6MM	86	2
	115	12
	129	13
	136	17
BOLT, FLANGE, 6X10	94	10
BOLT, FLANGE, 6X12	76	31
	78	26
	79	24
	81	23
	95	15
	96	13
	116	20
	117	19
	119	19
	130	24
	133	12
	134	13
	135	11
BOLT, FLANGE, 6X130	64	22
BOLT, FLANGE, 6X14	45	17
	50	6
	133	13
	134	14
	135	12
BOLT, FLANGE, 6X16	51	12
	57	22
		23
	64	23
	66	23
	121	10
	122	12
	133	14
BOLT, FLANGE, 6X16	134	15
	135	13
BOLT, FLANGE, 6X20	51	10
BOLT, FLANGE, 6X22	43	3
	49	9
	51	10
	57	15
	69	13
	78	27
	79	25
	81	24
BOLT, FLANGE, 6X25	63	19
	69	16
	120	17
BOLT, FLANGE, 6X28	54	15
	55	12
BOLT, FLANGE, 6X32	112	9
BOLT, FLANGE, 6X40	46	18
	51	11
	54	16
	55	13
BOLT, FLANGE, 6X65	54	17
	55	14
	63	20
BOLT, FLANGE, 6X8	121	11
	122	13
BOLT, FLANGE, 6X80	46	21
	63	21
BOLT, FLANGE, 6X95	46	19
BOLT, FLANGE, 8X16	66	24
BOLT, FLANGE, 8X25	123	14
BOLT, FLANGE, 8X32	124	5
BOLT, FLANGE, 8X45	62	17
	137	21
BOLT, FLANGE, 8X55	62	18
BOLT, HANDLE LEVER	79	17
BOLT, HEAD COVER	44	3
BOLT, HEX., 6X20	133	11
	134	12
	135	10
BOLT, LEVER	80	16
BOLT, OIL, 10X22	79	18
	80	17
BOLT, PIN	106	7
BOLT, RADIATOR DISTANCE	63	12
BOLT, SIDE STAND PIVOT	123	7
BOLT, SOCKET KNOCK, 5MM	47	15
BOLT, SOCKET, 5X9	136	16
BOLT, SOCKET, 6X18	52	3
	54	8
	55	7
	65	12
	128	11
	129	12
BOLT, SOCKET, 6X25	52	6
BOLT, SOCKET, 8MM	105	16
BOLT, SPECIAL FLANGE, 8X20	115	11
BOLT, SPECIAL FLANGE, 8X60	115	13

PART NAME INDEX

Part name	Page	Ref.
BOLT, SPECIAL, 6MM	87	9
	91	11
	93	16
BOLT, SPECIAL, 6X16	123	17
BOLT, SPECIAL, 6X23.5	53	3
BOLT, STUD, 7X17	45	10
BOLT, SWITCH SETTING	123	8
BOLT, TORX, 8X25	106	15
	107	13
BOOT	107	8
BOOT B	106	9
BOOT COMP.	79	7
	80	6
BOOT, BRAKE LEVER ROD	75	19
BOOT, PIN BUSH	106	8
BOSS, DRIVE FACE	58	3
BOX, INNER UPPER	93	12
BOX, LUGGAGE	115	9
BRACKET COMP., L. FR.	107	6
BRACKET SUB ASSY., FR. CALIPER	106	11
BRACKET, L. BRAKE LEVER	75	16
	77	13
BRACKET, RR. FENDER	129	3
BULB, POSITION	127	3
	128	1
BULB, WINKER	70	3
	127	6
		7
BUSH, ENGINE HANGER RUBBER	63	2
	65	1
BUSH, KICK SPINDLE	58	11
BUSH, MAIN STAND	63	6
	65	4
BUSH, RR. CUSHION UNDER RUBBER	65	3
BUSH, RUBBER	124	2
[C]		
CABLE COMP. A, THROTTLE	75	1
	77	1
CABLE COMP. B, THROTTLE	75	3
	77	3
CABLE COMP., FR. BRAKE CONNECTING	75	9
	77	7
CABLE COMP., RR. BRAKE	75	10
	77	8
CABLE COMP., SEAT LOCK	115	8
CALIPER SUB ASSY., L. FR.	106	10
	107	11
CAMSHAFT COMP.	47	2
CAM, RR. BRAKE	112	5
CAP	135	7
CAP ASSY., NOISE SUPPRESSOR	133	5
	134	5
	135	4
CAP COMP., FUEL FILLER	118	13
CAP COMP., RADIATOR	56	3
CAP, BLEEDER	106	4
	107	4
CAP, DUMMY	131	3
	132	6
	134	7
CAP, FUEL FILLER	117	12
CAP, LOCK NUT	74	1
		7
CAP, L. COVER	54	5
	55	4
CAP, MASTER CYLINDER	79	9
	80	8
CAP, RESERVE TANK	138	1
CAP, TAIL	122	4
CAP, TAPPET ADJUSTING HOLE	65	6
CASE ASSY.	72	6
	73	7
CASE COMP., L. FR. BOTTOM	105	15
CASE COMP., R. FR. BOTTOM	104	6
CASE COMP., TRANSMISSION	61	3
CASE SUB ASSY., AIR CLEANER	120	6
CASE, L. FR. BOTTOM	104	15
CASE, R. FR. BOTTOM	104	6
CHAIN, CAM	49	1
CHARGER UNIT, USB	135	8
CIRCLIP	79	20
CIRCLIP, 7MM	59	17
CIRCLIP, EXTERNAL, 16MM	58	18
CIRCLIP, INTERNAL, 28MM	60	23
CIRCLIP, INTERNAL, 32MM	54	9
	55	8
CIRCLIP, INTERNAL, 40MM	114	5
CLAMPER A, BRAKE HOSE	79	4
	80	3
CLAMPER B, BRAKE HOSE	79	5
	80	4
CLAMPER B, RR. BRAKE CABLE	75	11
	77	9
CLAMPER COMP. A, BRAKE HOSE	80	3
CLAMPER, A.C. GENERATOR CORD	63	10
CLAMPER, THROTTLE CABLE	75	2
	77	2
CLAMP, CORD	127	1
CLAMP, HOSE	57	17
		19
CLAMP, TUBE	57	21
	120	15
CLAMP, WATER HOSE, 21MM	57	19
CLAMP, WATER HOSE, 24MM	51	7
	57	18
CLIP, BUMPER SEAL	95	8
	96	6
CLIP, HOOD OPEN WIRE	50	7
CLIP, HOSE	57	17
CLIP, PISTON PIN, 13MM	68	5
CLIP, SLIDE	93	21
CLIP, SNAP FITTING	82	15
	84	13
	88	11
CLIP, SNAP FITTING	91	15
	93	22
		23
	95	10
	96	8
	101	11
	103	11
CLIP, TRIM	128	14
	129	18
CLIP, TUBE	62	16
	66	22
	120	14
		16
	138	6
COIL COMP., IGNITION	133	3
	134	3
	135	2
COLLAR	56	9
COLLAR A, HANDLE SETTING	82	13
	84	11
COLLAR B, HANDLE SETTING	82	14
	84	12
COLLAR B, RR. WHEEL SIDE	114	2
COLLAR, AIR CLEANER SETTING	120	1
COLLAR, FR. DISTANCE	108	5
	110	5
COLLAR, FR. WHEEL SIDE	108	3
		4
	110	3
		4
COLLAR, HORN SETTING	133	10
	134	9
COLLAR, KICK BOSS	58	12
COLLAR, MUFFLER PROTECTOR	117	14
	121	5
	122	5
COLLAR, RR. WHEEL SIDE	114	1
COLLAR, SEAL	59	13
COLLAR, SPRING	59	14
COLLAR, WINKER	125	2
CONTROL UNIT, ENGINE	133	1
	134	1
	135	1
COTTER, VALVE	47	12
COUNTERSHAFT	61	6
COVER COMP., CYLINDER HEAD	43	1
COVER COMP., HANDLE RR.	83	4
COVER COMP., HEAD	44	1
COVER COMP., RADIATOR	56	7
COVER COMP., WATER PUMP	51	2
COVER SET, FR.	87	1
	92	2
COVER SET, FR. TOP	89	1
	92	1
COVER SET, HANDLE FR.	83	5
COVER SET, HANDLE TOP	82	3
	84	17
COVER SET, L. BODY	98	4
	99	6

PART NAME INDEX

Part name	Page	Ref.
COVER SET, L. BODY	100	6
	102	6
COVER SET, L. FR.	87	5
	90	7
	92	7
	93	7
COVER SET, R. BODY	98	2
	99	4
	102	4
COVER SET, R. FR.	87	4
	89	6
	90	6
	92	6
COVER SET, SPEEDOMETER	82	6
COVER SUB ASSY., AIR CLEANER	120	8
COVER, BATTERY	131	6
	132	5
COVER, CABLE	136	6
COVER, CENTER	98	1
	99	3
	102	3
COVER, ENGINE CONTROL UNIT	133	2
	134	2
COVER, FR.	89	2
COVER, FR. LOWER	94	1
	95	1
	96	1
COVER, FR. TOP	87	2
COVER, FUEL PUMP	117	11
COVER, FUEL TANK	118	12
COVER, HANDLE FR.	82	4
	84	16
COVER, HANDLE FR. TOP	83	3
COVER, HANDLE RR.	82	5
COVER, INNER	93	14
COVER, INNER LOWER	87	8
	91	10
COVER, L. BODY SIDE	98	5
	100	7
	102	7
COVER, L. BRAKE LEVER BRACKET	75	17
	77	14
COVER, L. SIDE	54	1
	55	1
COVER, L. UNDER SIDE	99	2
	102	2
COVER, RACK	87	6
	91	8
	93	9
COVER, RESERVE TANK	128	6
	129	6
COVER, RR. BRAKE LOCK LEVER	76	23
COVER, RR. CENTER	98	6
	100	8
	102	8
	103	8
COVER, RR. FENDER LOWER	129	9
COVER, RR. FENDER UPPER	129	7
COVER, R. BODY SIDE	98	3
	99	5
	102	5
COVER, R. UNDER SIDE	99	1
	102	1
COVER, SEAL	72	10
COVER, SEAT CATCH	115	7
	116	21
COVER, UNDER	94	3
	95	4
	96	3
CRANKCASE COMP., L.	65	2
CRANKCASE COMP., R	63	1
CRANKCASE COMP., R.	63	1
CRANKSHAFT COMP.	67	1
CUSHION ASSY., RR.	124	1
CYLINDER ASSY., FR. BRAKE MASTER	79	6
CYLINDER ASSY., FR. MASTER	80	5
CYLINDER COMP.	50	1
CYLINDER SET, MASTER	79	13
	80	12
[D]		
DIAPHRAGM	79	11
	80	11
DISK, FR. BRAKE	108	8
	110	8
DOWEL PIN, 10X12	62	15
DOWEL PIN, 10X16	45	16
	50	5
DOWEL PIN, 3X5	46	20
DOWEL PIN, 8X10	51	9
	53	4
	63	18
DOWEL PIN, 8X14	54	14
	55	11
DOWEL PIN, SPECIAL, 6.3X10X30	63	14
DRAIN PLUG	57	16
DRIVER, SCREW	139	1
DRIVESHAFT	61	5
DUCT, AIR CLEANER	120	3
DUCT, L. COVER	54	4
	55	3
DUST SEAL, 21X32X5	109	12
	111	12
DUST SEAL, 25X35X6	114	8
DUST SEAL, 25X40X5	114	7
DUST SEAL, STEERING HEAD	85	8
[E]		
ELEMENT COMP., AIR CLEANER	120	18
ELEMENT SET, AIR CLEANER	120	5
EMBLEM, PRODUCT	82	7
	83	6
EQUALIZER ASSY.	76	21
EQUALIZER COMP.	78	16
E-RING, 3MM	78	25
[F]		
FACE COMP., MOVABLE DRIVE	58	5
FACE SET, DRIVEN	59	8
FACE SET, MOVABLE DRIVEN	59	9
FACE, DRIVE	58	2
FAN COMP., COOLING	57	13
FENDER ASSY., RR. INNER	128	8
	129	10
FENDER B, RR.	129	5
FENDER SET A, RR.	129	4
FENDER SET, FR.	86	1
		3
FENDER, RR.	128	5
FILTER SET	117	3
	118	3
FLYWHEEL COMP.	52	1
FORK ASSY., L. FR.	104	14
FORK ASSY., R. FR.	104	1
FUEL UNIT	117	15
	118	15
FUSE, MINI	131	7
		8
	132	7
		8
		9
[G]		
GARNISH, FR.	87	3
	89	3
	92	3
GARNISH, L. FR.	92	5
	95	5
GARNISH, L. INNER	89	5
GARNISH, R. FR.	92	4
	95	3
GARNISH, R. INNER	89	4
GASKET, CYLINDER	50	2
GASKET, CYLINDER HEAD	45	3
GASKET, CYLINDER HEAD COVER	43	2
GASKET, EX. PIPE	121	2
	122	2
GASKET, HEAD COVER	44	2
GASKET, L. COVER	54	3
	55	2
GASKET, STATOR BASE	63	8
GASKET, TENSIONER LIFTER	49	5
GASKET, TRANSMISSION CASE	61	4
GASKET, WATER PUMP COVER	51	3
GAUGE, OIL LEVEL	63	9
GEAR COMP., FINAL	61	8
GEAR COMP., KICK DRIVEN	58	9
GEAR, COUNTERSHAFT	61	7
GEAR, OIL PUMP DRIVEN	53	2
GRIP	139	2

PART NAME INDEX

Part name	Page	Ref.
GRIP COMP., THROTTLE	75	12
	77	11
GRIP, L. HANDLE	75	13
	77	12
GROMMET, SPEED SENSOR PROTECTOR	65	10
GUARD, DUCT	136	12
	137	24
GUARD, ENGINE CONTROL UNIT	136	1
GUARD, SPLASH	128	7
	129	8
GUIDE, CAM CHAIN	49	6
GUIDE, VALVE	45	2
[H]		
HARNESS, WIRE	133	6
	134	6
	135	5
HEADLIGHT UNIT	70	1
HEAD ASSY., CYLINDER	45	1
HOLDER, MASTER CYLINDER	79	10
HOLDER, MIRROR	77	10
	80	9
HOOK, LUGGAGE	87	7
	91	9
	93	10
HORN COMP.	133	9
	134	8
	135	6
HOSE A, WATER	56	10
HOSE B, WATER	56	11
HOSE COMP., FR. BRAKE	79	3
	80	2
HOSE COMP., FUEL FEED	117	9
	118	10
HOSE C, WATER	51	6
HOSE, BYPASS	56	12
HOSE, RESERVE TANK	138	4
HOUSING, UNDER THROTTLE	75	15
HOUSING, UPPER THROTTLE	75	14
[I]		
INJECTOR ASSY., FUEL	69	8
INSULATOR	107	10
INSULATOR, IN. PIPE	45	5
[J]		
JOINT B, BRAKE ARM	112	10
JOINT COMP., INJECTOR	69	12
JOINT COMP., WATER HOSE	56	1
JOINT, FUEL TUBE	118	8
[K]		
KEY, BLANK	136	4
KEY, WOODRUFF, 4MM	68	6
[L]		
LABEL, AIR CLEANER ELEMENT NOTICE	140	4
	141	3
		8
LABEL, CBS CAUTION	140	5
	141	4
		9
LABEL, DRIVE CAUTION	140	6
	141	5
LABEL, FUEL CAUTION	140	7
	141	6
LABEL, RADIATOR CAP	56	4
LABEL, REPLACEMENT INFORMATION	140	1
	141	1
LABEL, TIRE	140	2
	141	2
LABEL, TIRE & DRIVE & CARGO	141	7
LATCH	93	13
LENS	72	5
LENS ASSY.	73	6
LEVER COMP., BRAKE LOCK	78	17
		28
LEVER, L. STEERING HANDLE	76	20
	77	15
LEVER, R. STEERING HANDLE	79	14
	80	13
LID ASSY., INNER POCKET	93	8
LID, BATTERY	94	4
	95	6
	96	4
LIFTER ASSY., TENSIONER	49	3
LIGHT ASSY., FR. COMBINATION	71	1
LIGHT ASSY., LICENSE	128	2
	129	1
LIGHT COMP., LICENSE	128	3
LINK ASSY., ENGINE HANGER	136	8
LOCK COMP., SEAT	115	5
[M]		
MARK	142	3
		4
	144	4
		5
	148	4
		5
MARK, BATTERY CAUTION	140	3
MARK, ENGINE	142	2
	144	3
	148	3
MARK, HONDA	142	1
	143	9
	144	1
		2
	148	1
		2
METER ASSY., COMBINATION	72	2
	73	2
METER COMP.	72	4
	73	5
MIRROR COMP., L.	74	5
		9
MIRROR COMP., R.	74	4
		8
MUFFLER COMP., EX.	121	4
	122	3
[N]		
NUT B, BRAKE ROD ADJUSTING	112	11
NUT, BRAKE ROD ADJUSTING	112	11
NUT, CAP, 10MM	124	3
NUT, CAP, 7MM	121	7
	122	9
NUT, CLIP, 5MM	70	5
	71	3
	88	12
	91	14
		16
	93	20
		24
	94	7
	95	11
	96	9
	101	12
	103	12
	126	2
	128	13
	129	17
NUT, CLIP, 6MM	120	12
NUT, FENDER SETTING	57	14
NUT, FLANGE, 12MM	52	5
	110	10
NUT, FLANGE, 6MM	79	23
	81	22
	117	18
	119	18
NUT, HEX., 10MM	74	6
		11
NUT, HEX., 12MM	60	22
NUT, HEX., 14MM	58	17
NUT, HEX., 16MM	114	4
NUT, HEX., 8MM	45	15
NUT, SIDE STAND	123	9
NUT, SPECIAL, 28MM	59	15
NUT, SPRING, 4MM	82	11
	84	9
	87	10
	91	13
	93	19
	94	6
	95	9
	96	7
	98	8
	100	10

PART NAME INDEX

Part name	Page	Ref.
NUT, SPRING, 4MM	103	10
	127	9
	128	12
	129	16
NUT, STEERING STEM LOCK	85	5
NUT, TAPPET ADJUSTING	47	16
NUT, U, 10MM	82	12
	84	10
	137	19
NUT, U, 12MM	108	10
	110	10
NUT, U, 16MM	114	4
NUT, U, 5MM	76	27
	78	23
	129	15
[O]		
OIL SEAL, 14X20X3.2	61	13
OIL SEAL, 16X26X6	54	11
OIL SEAL, 20X32X6	66	20
OIL SEAL, 20.8X32X6	63	15
OIL SEAL, 24X31X3.5	58	20
OIL SEAL, 26X45X6	66	19
OIL SEAL, 34X52X7	61	14
	62	14
O-RING	51	5
	117	2
	118	2
O-RING B	66	25
O-RING, 15.4X2	56	2
O-RING, 15.8X2.4	105	18
O-RING, 16.8X2.4	105	18
O-RING, 18X3	63	16
O-RING, 1.5X9.5	49	8
O-RING, 1.9X20.4	69	3
O-RING, 29X2	45	12
O-RING, 30.8MM	66	21
O-RING, 34X2	51	8
O-RING, 38.8X1.9	60	21
O-RING, 6.3X2.2	69	14
O-RING, 7.8X1.9	56	6
O-RING, 9.5X1.9	45	13
O-RING, FUEL PUMP	117	10
	118	11
O-RING, THROTTLE BODY	69	2
OUTER COMP., CLUTCH	59	1
[P]		
PACKING	72	3
	73	3
PACKING, FUEL FILLER CAP	117	13
	118	14
PAD SET, FR. BRAKE	106	2
	107	2
PIECE SET, SLIDE	58	1
PIN A, PILLION STEP	97	7
PIN, BRAKE LOCK LEVER	78	18
PIN, HANGER	106	12
	107	12
PIN, PISTON	68	4
PIN, ROLLER GUIDE	59	10
PIN, SEAT HINGE	115	4
PIN, SPLIT, 1.6X15	97	6
PIN, SPLIT, 1.6X18	116	19
PIN, SPLIT, 3.0X20	123	11
PIPE COMP., FR. FORK	104	3
PIPE COMP., STEERING HANDLE	82	1
	83	1
PIPE, CP	127	2
PIPE, IN.	45	4
PIPE, SEAT	104	12
PISTON	67	3
	68	3
	106	14
	107	9
PIVOT, CAM CHAIN TENSIONER	49	4
PLATE COMP., DRIVE	59	2
PLATE, BEARING PUSH	63	5
PLATE, CLUTCH SIDE	59	3
PLATE, DIAPHRAGM	79	12
	80	10
PLATE, HEAT GUARD	121	1
	122	1
PLATE, L. COVER	54	2
PLATE, PILLION STEP SIDE	97	4
PLATE, RAMP	58	7
PLUG, AIR CLEANER DRAIN	120	7
PLUG, BEARING PUSH	63	3
PLUG, HOLE	116	14
PLUG, SPARK	45	7
POCKET, L. INNER	93	11
PROTECTOR	79	8
	80	7
PROTECTOR, MUFFLER	121	6
	122	6
PROTECTOR, SPEED SENSOR	65	9
PUMP ASSY., WATER	51	1
PUMP COMP., WATER	51	13
PUMP SET, OIL	53	1
PUMP UNIT, FUEL	117	1
	118	1
[R]		
RACE, STEERING BOTTOM BALL	85	4
RACE, STEERING BOTTOM CONE	85	7
RACE, STEERING TOP BALL	85	3
RACE, STEERING TOP CONE	85	6
RADIATOR ASSY.	56	5
RAIL, RR. GRAB	115	10
RATCHET, STARTER	58	4
REFLECTOR ASSY.	72	7
REFLECTOR, REFLEX	129	2
REFLECTOR, RR. REFLEX	128	4
RELAY ASSY., POWER	131	4
	132	3
RELAY COMP., POWER	131	4
		5
	132	3
		4
RELAY COMP., WINKER	72	8
	73	8
RETAINER, FUEL PUMP	117	5
	118	6
RETAINER, VALVE SPRING	47	10
RING	107	7
RING SET, PISTON	67	2
RING, BACK UP	104	5
RING, OIL SEAL STOPPER	104	11
RING, PISTON	104	8
RING, SEAL	69	9
RING, STOP	80	19
RING, STOPPER	104	10
	106	6
RIVET, PUSH, 6MM	93	17
ROD, TRIP	73	4
ROLLER SET, WEIGHT	58	6
ROLLER, GUIDE	59	11
RUBBER A, STAND STOPPER	123	12
RUBBER B, MOUNTING	134	10
RUBBER C, SEAT SETTING	115	3
RUBBER, CLUTCH DAMPER	59	6
RUBBER, FUEL SEAL	117	8
RUBBER, LINK STOPPER	136	9
RUBBER, L. WINKER MOUNTING	125	3
RUBBER, MOUNTING	122	7
RUBBER, PILLION STEP	97	1
RUBBER, PROTECTOR PACKING	121	3
RUBBER, R. WINKER MOUNTING	125	1
RUBBER, SCREEN SETTING	136	10
RUBBER, SEAL	115	1
RUBBER, TAILLIGHT BRACKET	133	8
[S]		
SCREEN, OIL FILTER	65	7
SCREW-WASHER, 4X12	79	22
	81	21
SCREW-WASHER, 5X12	69	15
SCREW-WASHER, 5X20	78	24
SCREW SET	69	1
SCREW, 6X12	100	9
	103	9
SCREW, BLEEDER	106	3
	107	3
SCREW, FLAT, 4X12	79	21
SCREW, FLAT, 4X16	80	20
SCREW, HANDLE LEVER PIVOT	76	25
	78	21
		22
SCREW, OVAL, 6X45	82	10
	83	8
SCREW, PAN, 5X11.5	88	13
	91	17
	93	25

PART NAME INDEX

Part name	Page	Ref.
SCREW, PAN, 5X11.5	126	3
	128	15
	129	19
	138	5
SCREW, PAN, 5X12	76	29
SCREW, PAN, 5X13	70	4
	71	2
		5
	76	26
	98	7
	127	8
	129	14
SCREW, PAN, 5X13.5	93	15
SCREW, PAN, 5X17	82	9
SCREW, PAN, 5X20	76	30
SCREW, PAN, 5X8	78	20
SCREW, PAN, 6X14	122	8
SCREW, PAN, 6X6	49	7
SCREW, SCREEN SETTING	136	13
SCREW, SPECIAL PAN, 5MM	82	16
SCREW, SPECIAL, 5MM	94	5
	95	7
	96	5
SCREW, TAPPET ADJUSTING	47	14
SCREW, TAPPING, 3X14	72	11
	73	9
SCREW, TAPPING, 4X10	54	13
	55	10
SCREW, TAPPING, 4X12	82	17
		18
	84	14
	88	14
		15
	91	18
		19
	93	26
		27
	94	9
	95	13
		14
	96	11
		12
	98	9
		10
	101	13
		14
	103	13
	116	16
	127	10
	128	17
	129	21
	137	20
SCREW, TAPPING, 4X16	84	18
	91	20
	116	17
	119	17
	130	22
SCREW, TAPPING, 4X8	54	12
SCREW, TAPPING, 5X12	93	28
	130	23
SCREW, TAPPING, 5X16	72	12
	73	10
	84	15
	91	12
	93	18
	127	11
	128	18
SCREW, TAPPING, 5X20	120	13
SCREW, TORX, 5X8.7	69	4
SCREW, U-LOCK FLAT, 6X12	136	18
SEAL SET, FR. FORK	104	13
SEAL SET, PISTON	106	1
	107	1
SEAL, AIR CLEANER	120	2
SEAL, BELT COVER DUCT	55	5
SEAL, DRAIN	56	6
SEAL, DRIVEN FACE, 34X41X4	60	20
SEAL, DUCT	54	6
	55	6
SEAL, DUST	104	7
	117	6
	118	7
SEAL, L. DUCT COVER	54	7
SEAL, RR. INNER FENDER	128	9
	129	11
SEAL, VALVE STEM	47	1
SEAT B, SPRING	104	9
SEAT COMP., DOUBLE	115	2
SEAT SET	69	11
SEAT, VALVE SPRING	47	11
SENSOR ASSY., SPEED	65	11
SENSOR ASSY., WATER TEMPERATURE	45	9
SENSOR, OXYGEN	45	8
	46	22
SHAFT, DRIVE	61	5
SHAFT, MAIN STAND	123	4
SHAFT, ROCKER ARM	47	6
SHOE SET, BRAKE	112	1
SHUTTER, KEY	136	3
SLEEVE, RR. BRAKE CAM	61	1
SOCKET ASSY., FR. WINKER	70	2
SOCKET COMP.	127	5
SOLENOID	69	10
SPACER, IGNITION COIL	133	4
	134	4
	135	3
SPINDLE COMP., KICK STARTER	58	10
SPRING A, SIDE STAND	123	13
SPRING, BEARING PUSH	63	4
SPRING, BRAKE LEVER RETURN	79	16
SPRING, BRAKE LOCK ARM RETURN	76	24
	78	19
SPRING, BRAKE SHOE	112	6
SPRING, CLUTCH	59	4
SPRING, DELAY	80	14
SPRING, DRIVEN FACE	59	12
SPRING, FR. FORK	104	2
SPRING, KICK DRIVEN GEAR	58	8
SPRING, KICK RETURN	58	13
SPRING, LEVER	80	15
SPRING, MAIN STAND	123	5
SPRING, OIL FILTER SCREEN	65	8
SPRING, PAD	106	5
	107	5
SPRING, REBOUND	104	4
SPRING, RETURN	79	15
SPRING, RR. BRAKE ARM	112	8
SPRING, SEAT LOCK	115	6
SPRING, VALVE	47	9
SPROCKET, CAM	47	3
STAND COMP., MAIN	123	3
STATOR COMP.	52	2
STAY COMP., FR. COVER	137	25
STAY COMP., FUEL HOSE CLAMPER	45	6
STAY COMP., IGNITION COIL	50	3
		8
STAY, FR. COVER	136	11
	137	23
STAY, WIRE	69	5
STEM SUB ASSY., STEERING	85	10
STEP, FLOOR	94	2
	95	2
	96	2
STRIPE A, L. FR. COVER	142	7
	144	7
	145	12
		17
	146	22
	148	7
	149	7
STRIPE A, R. FR. COVER	142	6
	144	6
	145	11
		16
	146	21
	148	6
STRIPE B, FR. COVER	142	8
	143	8
	144	8
	145	8
STRIPE B, L. FR. COVER	145	13
		18
	147	24
	149	9
STRIPE B, R. FR. COVER	146	23
	149	8
STRIPE, FR. COVER	142	5
STRIPE, L. BODY COVER	143	11
	145	10
		15
	146	20
	147	26
	149	13
STRIPE, L. FR. COVER	149	11

PART NAME INDEX

Part name	Page	Ref.
STRIPE, R. BODY COVER	143	10
	145	9
		14
		19
	146	19
	147	25
	149	12
STRIPE, R. FR. COVER	149	10
SUB CORD, FR. STOP SWITCH	79	1
SUB HARNESS, BATTERY	131	2
	132	2
SUB HARNESS, ENGINE	133	7
SUB HARNESS, SPEEDOMETER	72	1
	73	1
		11
SUSPENSION, WINKER RELAY	72	9
SWINGARM ASSY.	114	3
SWITCH ASSY., COMBINATION & LOCK	136	2
	137	22
SWITCH ASSY., DIMMER & HORN & WINKER	77	5
SWITCH ASSY., FR. STOP	75	8
	77	6
	79	2
	80	1
SWITCH ASSY., SEAT OPENER	136	5
SWITCH ASSY., SIDE STAND	123	2
		15
SWITCH ASSY., START	77	4
SWITCH COMP., COMBINATION & LOCK	136	2
SWITCH UNIT, DIMMER	75	5
SWITCH UNIT, HORN	75	6
SWITCH UNIT, STARTER	75	4
SWITCH UNIT, WINKER	75	7
[T]		
TAILLIGHT ASSY.	126	1
TANK COMP., FUEL	117	4
	118	5
TANK, RESERVE	138	2
TENSIONER ASSY., CAM CHAIN	49	2
THERMOSTAT ASSY.	51	4
THREAD COMP., STEERING HEAD TOP	85	11
THROTTLE BODY ASSY.	69	6
TIRE, FR.	108	7
	110	7
TIRE, RR.	112	3
TRAY, FUEL	118	4
TUBE, AIR BREATHER	56	8
TUBE, AIR CLEANER CONNECTING	120	9
TUBE, AIR CLEANER DRAIN	120	7
TUBE, BREATHER	120	4
TUBE, DRAIN	65	5
	117	7
TUBE, DRAIN	118	9
	120	11
TUBE, MISSION BREATHER	61	2
TUBE, RESERVE DRAIN	138	3
[V]		
VALVE, EX.	47	8
VALVE, IN.	47	7
VALVE, RIM	108	1
	110	1
	112	4
[W]		
WASHER, 12X24X2.3	52	4
WASHER, 12.2X29X2.5	59	16
WASHER, 15X29X7	58	19
WASHER, 16X22	58	16
WASHER, 8MM	45	11
WASHER, DRAIN PLUG, 12MM	63	17
WASHER, OIL BOLT	79	19
	80	18
WASHER, PLAIN, 10MM	114	9
	123	10
	124	4
WASHER, PLAIN, 6MM	97	5
	121	8
	122	10
WASHER, PLAIN, 8MM	116	18
WASHER, SEALING, 6.5MM	50	4
WASHER, SEALING, 8MM	61	9
	65	14
WASHER, SPECIAL, 14MM	58	15
WASHER, SPECIAL, 8MM	105	17
WASHER, STEERING STEM NUT	85	9
WASHER, THRUST, 10MM	58	14
WASHER, WAVE	106	13
WEIGHT A, HANDLE	82	2
	83	2
WEIGHT SET, CLUTCH	59	5
WHEEL SUB ASSY., FR.	108	6
	110	6
WHEEL SUB ASSY., RR.	112	2
	113	12
WINKER ASSY., L. RR.	125	5
WINKER ASSY., R. RR.	125	4
WRENCH, SPARK PLUG	139	3

1 FOREWORD INDEX

2 ENGINE GROUP

3 FRAME GROUP

4 PART NUMBER INDEX

5 PART NAME INDEX

HONDA

E.2022.10

Published by Honda Motor Co., Ltd.
Printed in Japan

October 27, 2022

PARTS CATALOGUE NEWS

Honda Motor Co., Ltd.

PARTS CATALOGUE - CORRECTED

CODE NO.	18K60H03
PARTS CATALOGUE NEWS	ACB125CBF ACB125CBF H/K/L/M/N/P
NEWS NO.	001

NOTE A:PART NO.CHANGE D:NEWLY PROVIDED E:PART NO.DELETION K:REQUIRED NO.CORRECTION L:APPLICATION SERIAL NO.CORRECTION
M:PART DESCRIPTION CORRECTION T:APPLICATION CORRECTION Z:REMARKS CHANGE

BOOKNo.:18K60H03

ACB125CBF (ACB125CBFP)

No.	MODEL		ACB125CBFP							
	COLOR		**Pearl arctic white**	**Pearl sylvestris gray**	Obsidian black metallic	Stellar blue metallic	Applicable model		Applicable block No.	Ref. No.
	CODE		NH-C86P	NH-C87P	NH-C88M	PB-441M				
	Name of colored parts	Basic part No.	NHC86	NHC87	NHC88	PB441	Initial applicable model	Final applicable model		
1	BRACKET, RR. FENDER	50186-K59-A70	ZA	ZA	ZA	ZA			F-39-1	3
2	CAP, TAIL	18306-K59-A70	ZA	ZA	ZA	ZA			F-30-1	4
3	COVER COMP., HANDLE RR.	53280-K2V-N30	ZA	ZA	ZA	ZA			F-9-1	4
4	COVER SET, FR.	64300-K2V-H20	ZF	ZH	ZK	ZG			F-12-2	2
5	COVER SET, FR. TOP	64200-K2V-H20	ZK	ZJ	ZH	ZG			F-12-2	1
6	COVER SET, HANDLE TOP	53290-K2V-H20	ZF	ZH	ZK	ZG			F-9-1	17
7	COVER SET, L. BODY	83550-K2V-H20	ZF	ZH	ZK	ZG			F-15-2	6
8	COVER SET, L. FR.	64600-K2V-H20	ZF	ZH	ZK	ZG			F-12-2	7
9	COVER SET, R. BODY	83450-K2V-H20	ZF	ZH	ZK	ZG			F-15-2	4
10	COVER SET, R. FR.	64500-K2V-H20	ZF	ZH	ZK	ZG			F-12-2	6
11	COVER, CENTER	80151-K2V-N30	ZA	ZA	ZA	ZA			F-15-2	3
12	COVER, FR. LOWER	64308-K2V-N30	ZA	ZA	ZA	ZA			F-14-2	1
13	COVER, HANDLE FR.	53205-K2V-N30	ZA	ZA	ZA	ZA			F-9-1	16
14	COVER, INNER	81141-K2V-N30	ZA	ZA	ZA	ZA			F-12-2	14
15	COVER, L. BODY SIDE	83620-K2V-N30	ZA	ZA	ZA	ZA			F-15-2	7
16	COVER, L. UNDER SIDE	64360-K60-B60	ZB	ZB	ZB	ZB			F-15-2	2
17	COVER, R. BODY SIDE	83520-K2V-N30	ZA	ZA	ZA	ZA			F-15-2	5
18	COVER, R. UNDER SIDE	64350-K60-B60	ZB	ZB	ZB	ZB			F-15-2	1
19	COVER, RACK	81131-K2V-N30	ZT	ZS	ZR	ZQ			F-12-2	9
20	COVER, RR. CENTER	83750-K59-A70	YC	YB	YA	ZY			F-15-2	8
21	COVER, RR. FENDER UPPER	80103-K59-A70	ZB	ZB	ZB	ZB			F-39-1	7
22	COVER, UNDER	64340-K59-A70	ZB	ZB	ZB	ZB			F-14-2	3
23	FENDER SET A, RR.	80100-K59-T10	ZA	ZA	ZA	ZA			F-39-1	4
24	FENDER SET, FR.	61110-K2V-H20	ZF	ZH	ZK	ZG			F-11	3
25	GARNISH, FR.	64303-K2V-N30	ZA	ZA	ZA	ZA			F-12-2	3

NOTE A:PART NO.CHANGE D:NEWLY PROVIDED E:PART NO.DELETION K:REQUIRED NO.CORRECTION L:APPLICATION SERIAL NO.CORRECTION
M:PART DESCRIPTION CORRECTION T:APPLICATION CORRECTION Z:REMARKS CHANGE

BOOKNo.:18K60H03

ACB125CBF (ACB125CBFP)

No.	MODEL / COLOR / CODE		ACB125CBFP						Applicable block No.	Ref. No.
			Pearl arctic white	**Pearl sylvestris gray**	Obsidian black metallic	Stellar blue metallic	Applicable model			
			NH-C86P	NH-C87P	NH-C88M	PB-441M				
	Name of colored parts	Basic part No.	NHC86	NHC87	NHC88	PB441	Initial applicable model	Final applicable model		
26	GARNISH, L. FR.	64420-K2V-N30	ZA	ZA	ZA	ZA			F-12-2	5
27	GARNISH, R. FR.	64320-K2V-N30	ZA	ZA	ZA	ZA			F-12-2	4
28	HOOK, LUGGAGE	81132-GAH-000	YV	YV	YV	YV			F-12-2	10
29	LID ASSY., INNER POCKET	81130-K2V-N30	ZA	ZA	ZA	ZA			F-12-2	8
30	LID, BATTERY	64460-K59-A70	ZB	ZB	ZB	ZB			F-14-2	4
31	MARK	86531-KYZ-710	ZA	ZA	ZA	ZA			F-48-2	4
32	MARK	86611-K2V-H20	ZA	ZC	ZE	ZB			F-48-2	5
33	MARK, HONDA	86101-K2V-H20	ZA	ZC	ZE	ZB			F-48-2	1
34	MARK, HONDA	86102-KZR-700	ZA	ZA	ZA	ZA			F-48-2	2
35	PLUG, HOLE	90656-GCC-000	ZE	ZE	ZE	ZE			F-24	14
36	RAIL, RR. GRAB	84100-K59-A70	ZH	ZH	ZH	ZH			F-24	10
37	STEP, FLOOR	64310-K2V-N30	ZA	ZA	ZA	ZA			F-14-2	2
38	STRIPE A, L. FR. COVER	86643-K2V-H20	ZA	ZC	ZE	ZB			F-48-2	7
39	STRIPE A, R. FR. COVER	86642-K2V-H20	ZA	ZC	ZE	ZB			F-48-2	6
40	STRIPE B, L. FR. COVER	86645-K2V-H20	ZA	ZC	ZE	ZB			F-48-2	9
41	STRIPE B, R. FR. COVER	86644-K2V-H20	ZA	ZC	ZE	ZB			F-48-2	8
42	STRIPE, L. BODY COVER	86833-K2V-H20	ZA	ZC	ZE	ZB			F-48-2	13
43	STRIPE, L. FR. COVER	86647-K2V-H20	ZA	ZC	ZE	ZB			F-48-2	11
44	STRIPE, R. BODY COVER	86832-K2V-H20	ZA	ZC	ZE	ZB			F-48-2	12
45	STRIPE, R. FR. COVER	86646-K2V-H20	ZA	ZC	ZE	ZB			F-48-2	10
46	WHEEL SUB ASSY., FR.	44650-K2V-N30	ZA	ZA	ZA	ZA			F-20-41	6
47	WHEEL SUB ASSY., RR.	42650-K2V-N30	ZA	ZA	ZA	ZA			F-22-30	12

NOTE A:PART NO.CHANGE D:NEWLY PROVIDED E:PART NO.DELETION K:REQUIRED NO.CORRECTION L:APPLICATION SERIAL NO.CORRECTION
M:PART DESCRIPTION CORRECTION T:APPLICATION CORRECTION Z:REMARKS CHANGE

July 20, 2023

PARTS CATALOGUE NEWS

Honda Motor Co., Ltd.

CODE NO.	18K60H03
PARTS CATALOGUE NEWS	ACB125CBF ACB125CBF H/K/L/M/N/P
NEWS NO.	004

NEW MODEL ACB125CBFR-2PH, 3PH TYPES COMPONENT PARTS-MARKETED

This Parts News lists above models parts exclusively. All other parts not listed herein are the same as base model parts.

Base model	Model	Destination code	Destination	Parts catalogue code	Applicable engine serial No.	Applicable frame serial No.	Applicable throttle body serial No.
ACB125CBFP-2PH	ACB125CBFR	2PH	Philippines	2PH		K2VJ1000001~	GQYKB A
ACB125CBFP-2PH		3PH		3PH		K2VJ2000001~	

BOOKNo. :18K60H03

ACB125CBF (ACB125CBFR).....2PH

No.	MODEL		ACB125CBFR							
	COLOR		Pearl arctic white	Pearl sylvestris gray	Obsidian black metallic	Stellar blue metallic	Applicable model		Applicable block No.	Ref. No.
	CODE		NH-C86P	NH-C87P	NH-C88M	PB-441M				
	Name of colored parts	Basic part No.	NHC86	NHC87	NHC88	PB441	Initial applicable model	Final applicable model		
1	BRACKET, RR. FENDER	50186-K59-A70	ZA	ZA	ZA	ZA			F-39-1	3
2	CAP, TAIL	18306-K59-A70	ZA	ZA	ZA	ZA			F-30-1	4
3	COVER COMP., HANDLE RR.	53280-K2V-N30	ZA	ZA	ZA	ZA			F-9-1	4
4	COVER SET, FR.	64300-K2V-H20	ZF	ZH	ZK	ZG			F-12-2	2
5	COVER SET, FR. TOP	64200-K2V-H20	ZK	ZJ	ZH	ZG			F-12-2	1
6	COVER SET, HANDLE TOP	53290-K2V-H20	ZF	ZH	ZK	ZG			F-9-1	17
7	COVER SET, L. BODY	83550-K2V-H20	ZF	ZH	ZK	ZG			F-15-2	6
8	COVER SET, L. FR.	64600-K2V-H20	ZF	ZH	ZK	ZG			F-12-2	7
9	COVER SET, R. BODY	83450-K2V-H20	ZF	ZH	ZK	ZG			F-15-2	4
10	COVER SET, R. FR.	64500-K2V-H20	ZF	ZH	ZK	ZG			F-12-2	6
11	COVER, CENTER	80151-K2V-N30	ZA	ZA	ZA	ZA			F-15-2	3
12	COVER, FR. LOWER	64308-K2V-N30	ZA	ZA	ZA	ZA			F-14-2	1
13	COVER, HANDLE FR.	53205-K2V-N30	ZA	ZA	ZA	ZA			F-9-1	16
14	COVER, INNER	81141-K2V-N30	ZA	ZA	ZA	ZA			F-12-2	14
15	COVER, L. BODY SIDE	83620-K2V-N30	ZA	ZA	ZA	ZA			F-15-2	7
16	COVER, L. UNDER SIDE	64360-K60-B60	ZB	ZB	ZB	ZB			F-15-2	2
17	COVER, R. BODY SIDE	83520-K2V-N30	ZA	ZA	ZA	ZA			F-15-2	5
18	COVER, R. UNDER SIDE	64350-K60-B60	ZB	ZB	ZB	ZB			F-15-2	1
19	COVER, RACK	81131-K2V-N30	ZT	ZS	ZR	ZQ			F-12-2	9
20	COVER, RR. CENTER	83750-K59-A70	YC	YB	YA	ZY			F-15-2	8
21	COVER, RR. FENDER UPPER	80103-K59-A70	ZB	ZB	ZB	ZB			F-39-1	7
22	COVER, UNDER	64340-K59-A70	ZB	ZB	ZB	ZB			F-14-2	3
23	FENDER SET A, RR.	80100-K59-T10	ZA	ZA	ZA	ZA			F-39-1	4
24	FENDER SET, FR.	61110-K2V-H20	ZF	ZH	ZK	ZG			F-11	3
25	GARNISH, FR.	64303-K2V-N30	ZA	ZA	ZA	ZA			F-12-2	3

BOOKNo. :18K60H03

ACB125CBF (ACB125CBFR).....2PH

No.	MODEL		ACB125CBFR							
	COLOR		Pearl arctic white	Pearl sylvestris gray	Obsidian black metallic	Stellar blue metallic	Applicable model		Applicable block No.	Ref. No.
	CODE		NH-C86P	NH-C87P	NH-C88M	PB-441M				
	Name of colored parts	Basic part No.	NHC86	NHC87	NHC88	PB441	Initial applicable model	Final applicable model		
26	GARNISH, L. FR.	64420-K2V-N30	ZA	ZA	ZA	ZA			F-12-2	5
27	GARNISH, R. FR.	64320-K2V-N30	ZA	ZA	ZA	ZA			F-12-2	4
28	HOOK, LUGGAGE	81132-GAH-000	YV	YV	YV	YV			F-12-2	10
29	LID ASSY., INNER POCKET	81130-K2V-N30	ZA	ZA	ZA	ZA			F-12-2	8
30	LID, BATTERY	64460-K59-A70	ZB	ZB	ZB	ZB			F-14-2	4
31	MARK	86531-KYZ-710	ZA	ZA	ZA	ZA			F-48-2	4
32	MARK	86611-K2V-H20	ZA	ZC	ZE	ZB			F-48-2	5
33	MARK, HONDA	86101-K2V-H20	ZA	ZC	ZE	ZB			F-48-2	1
34	MARK, HONDA	86102-KZR-700	ZA	ZA	ZA	ZA			F-48-2	2
35	PLUG, HOLE	90656-GCC-000	ZE	ZE	ZE	ZE			F-24	14
36	RAIL, RR. GRAB	84100-K59-A70	ZH	ZH	ZH	ZH			F-24	10
37	STEP, FLOOR	64310-K2V-N30	ZA	ZA	ZA	ZA			F-14-2	2
38	STRIPE A, L. FR. COVER	86643-K2V-H20	ZA	ZC	ZE	ZB			F-48-2	7
39	STRIPE A, R. FR. COVER	86642-K2V-H20	ZA	ZC	ZE	ZB			F-48-2	6
40	STRIPE B, L. FR. COVER	86645-K2V-H20	ZA	ZC	ZE	ZB			F-48-2	9
41	STRIPE B, R. FR. COVER	86644-K2V-H20	ZA	ZC	ZE	ZB			F-48-2	8
42	STRIPE, L. BODY COVER	86833-K2V-H20	ZA	ZC	ZE	ZB			F-48-2	13
43	STRIPE, L. FR. COVER	86647-K2V-H20	ZA	ZC	ZE	ZB			F-48-2	11
44	STRIPE, R. BODY COVER	86832-K2V-H20	ZA	ZC	ZE	ZB			F-48-2	12
45	STRIPE, R. FR. COVER	86646-K2V-H20	ZA	ZC	ZE	ZB			F-48-2	10
46	WHEEL SUB ASSY., FR.	44650-K2V-H30	ZA	ZA	ZA	ZA			F-20-41	6
47	WHEEL SUB ASSY., RR.	42650-K2V-H30	ZA	ZA	ZA	ZA			F-22-30	12

BOOKNo. :18K60H03

ACB125CBF (ACB125CBFR).....2PH

No.	MODEL		ACB125CBFR				
	COLOR		Pearl crimson red	Applicable model		Applicable block No.	Ref. No.
	CODE		R-410P				
	Name of colored parts	Basic part No.	R410	Initial applicable model	Final applicable model		
1	BRACKET, RR. FENDER	50186-K59-A70	ZA			F-39-1	3
2	CAP, TAIL	18306-K59-A70	ZA			F-30-1	4
3	COVER COMP., HANDLE RR.	53280-K2V-N30	ZA			F-9-1	4
4	COVER SET, FR.	64300-K2V-H20	ZJ			F-12-2	2
5	COVER SET, FR. TOP	64200-K2V-H20	ZF			F-12-2	1
6	COVER SET, HANDLE TOP	53290-K2V-H20	ZJ			F-9-1	17
7	COVER SET, L. BODY	83550-K2V-H20	ZJ			F-15-2	6
8	COVER SET, L. FR.	64600-K2V-H20	ZJ			F-12-2	7
9	COVER SET, R. BODY	83450-K2V-H20	ZJ			F-15-2	4
10	COVER SET, R. FR.	64500-K2V-H20	ZJ			F-12-2	6
11	COVER, CENTER	80151-K2V-N30	ZA			F-15-2	3
12	COVER, FR. LOWER	64308-K2V-N30	ZA			F-14-2	1
13	COVER, HANDLE FR.	53205-K2V-N30	ZA			F-9-1	16
14	COVER, INNER	81141-K2V-N30	ZA			F-12-2	14
15	COVER, L. BODY SIDE	83620-K2V-N30	ZA			F-15-2	7
16	COVER, L. UNDER SIDE	64360-K60-B60	ZB			F-15-2	2
17	COVER, R. BODY SIDE	83520-K2V-N30	ZA			F-15-2	5
18	COVER, R. UNDER SIDE	64350-K60-B60	ZB			F-15-2	1
19	COVER, RACK	81131-K2V-N30	ZP			F-12-2	9
20	COVER, RR. CENTER	83750-K59-A70	ZX			F-15-2	8
21	COVER, RR. FENDER UPPER	80103-K59-A70	ZB			F-39-1	7
22	COVER, UNDER	64340-K59-A70	ZB			F-14-2	3
23	FENDER SET A, RR.	80100-K59-T10	ZA			F-39-1	4
24	FENDER SET, FR.	61110-K2V-H20	ZJ			F-11	3
25	GARNISH, FR.	64303-K2V-N30	ZA			F-12-2	3

BOOKNo. :18K60H03

ACB125CBF (ACB125CBFR).....2PH

No.	MODEL / COLOR / CODE / Name of colored parts	Basic part No.	ACB125CBFR Pearl crimson red R-410P R410	Applicable model: Initial applicable model	Applicable model: Final applicable model	Applicable block No.	Ref. No.
26	GARNISH, L. FR.	64420-K2V-N30	ZA			F-12-2	5
27	GARNISH, R. FR.	64320-K2V-N30	ZA			F-12-2	4
28	HOOK, LUGGAGE	81132-GAH-000	YV			F-12-2	10
29	LID ASSY., INNER POCKET	81130-K2V-N30	ZA			F-12-2	8
30	LID, BATTERY	64460-K59-A70	ZB			F-14-2	4
31	MARK	86531-KYZ-710	ZA			F-48-2	4
32	MARK	86611-K2V-H20	ZD			F-48-2	5
33	MARK, HONDA	86101-K2V-H20	ZD			F-48-2	1
34	MARK, HONDA	86102-KZR-700	ZA			F-48-2	2
35	PLUG, HOLE	90656-GCC-000	ZE			F-24	14
36	RAIL, RR. GRAB	84100-K59-A70	ZH			F-24	10
37	STEP, FLOOR	64310-K2V-N30	ZA			F-14-2	2
38	STRIPE A, L. FR. COVER	86643-K2V-H20	ZD			F-48-2	7
39	STRIPE A, R. FR. COVER	86642-K2V-H20	ZD			F-48-2	6
40	STRIPE B, L. FR. COVER	86645-K2V-H20	ZD			F-48-2	9
41	STRIPE B, R. FR. COVER	86644-K2V-H20	ZD			F-48-2	8
42	STRIPE, L. BODY COVER	86833-K2V-H20	ZD			F-48-2	13
43	STRIPE, L. FR. COVER	86647-K2V-H20	ZD			F-48-2	11
44	STRIPE, R. BODY COVER	86832-K2V-H20	ZD			F-48-2	12
45	STRIPE, R. FR. COVER	86646-K2V-H20	ZD			F-48-2	10
46	WHEEL SUB ASSY., FR.	44650-K2V-H30	ZA			F-20-41	6
47	WHEEL SUB ASSY., RR.	42650-K2V-H30	ZA			F-22-30	12

BOOKNo. :18K60H03

ACB125CBF (ACB125CBFR).....3PH

No.	MODEL		ACB125CBFR				
	COLOR		Pearl arctic white	Applicable model		Applicable block No.	Ref. No.
	CODE		NH-C86P				
	Name of colored parts	Basic part No.	NHC86P	Initial applicable model	Final applicable model		
1	BRACKET, RR. FENDER	50186-K59-A70	ZA			F-39-1	3
2	CAP, TAIL	18306-K59-A70	ZA			F-30-1	4
3	COVER COMP., HANDLE RR.	53280-K2V-N30	ZA			F-9-1	4
4	COVER SET, FR.	64300-K2V-H40	ZB			F-12-2	2
5	COVER SET, FR. TOP	64200-K2V-H20	ZM			F-12-2	1
6	COVER SET, HANDLE TOP	53290-K2V-H40	ZB			F-9-1	17
7	COVER SET, L. BODY	83550-K2V-H40	ZB			F-15-2	6
8	COVER SET, L. FR.	64600-K2V-H40	ZB			F-12-2	7
9	COVER SET, R. BODY	83450-K2V-H40	ZB			F-15-2	4
10	COVER SET, R. FR.	64500-K2V-H40	ZB			F-12-2	6
11	COVER, CENTER	80151-K2V-N30	ZA			F-15-2	3
12	COVER, FR. LOWER	64308-K2V-N30	ZA			F-14-2	1
13	COVER, HANDLE FR.	53205-K2V-N30	ZA			F-9-1	16
14	COVER, INNER	81141-K2V-N30	ZA			F-12-2	14
15	COVER, L. BODY SIDE	83620-K2V-N30	ZA			F-15-2	7
16	COVER, L. UNDER SIDE	64360-K60-B60	ZB			F-15-2	2
17	COVER, R. BODY SIDE	83520-K2V-N30	ZA			F-15-2	5
18	COVER, R. UNDER SIDE	64350-K60-B60	ZB			F-15-2	1
19	COVER, RACK	81131-K2V-N30	ZM			F-12-2	9
20	COVER, RR. CENTER	83750-K59-A70	YD			F-15-2	8
21	COVER, RR. FENDER UPPER	80103-K59-A70	ZB			F-39-1	7
22	COVER, UNDER	64340-K59-A70	ZB			F-14-2	3
23	FENDER SET A, RR.	80100-K59-T10	ZA			F-39-1	4
24	FENDER SET, FR.	61110-K2V-H40	ZB			F-11	3
25	GARNISH, FR.	64303-K2V-N30	ZA			F-12-2	3

BOOKNo. :18K60H03

ACB125CBF (ACB125CBFR).....3PH

No.	MODEL		ACB125CBFR				
	COLOR		Pearl arctic white	Applicable model		Applicable block No.	Ref. No.
	CODE		NH-C86P				
	Name of colored parts	Basic part No.	NHC86P	Initial applicable model	Final applicable model		
26	GARNISH, L. FR.	64420-K2V-N30	ZA			F-12-2	5
27	GARNISH, R. FR.	64320-K2V-N30	ZA			F-12-2	4
28	HOOK, LUGGAGE	81132-GAH-000	YV			F-12-2	10
29	LID ASSY., INNER POCKET	81130-K2V-N30	ZA			F-12-2	8
30	LID, BATTERY	64460-K59-A70	ZB			F-14-2	4
31	MARK	86531-KYZ-710	ZA			F-48-2	4
32	MARK	86651-K2V-H40	ZA			F-48-2	24
33	MARK, HONDA	86101-K2V-H40	ZA			F-48-2	1
34	MARK, HONDA	86102-KZR-700	ZA			F-48-2	2
35	PLUG, HOLE	90656-GCC-000	ZE			F-24	14
36	RAIL, RR. GRAB	84100-K59-A70	ZH			F-24	10
37	STEP, FLOOR	64310-K2V-N30	ZA			F-14-2	2
38	STRIPE A, L. BODY COVER	86833-K2V-H40	ZA			F-48-2	26
39	STRIPE A, L. FR. COVER	86643-K2V-H40	ZA			F-48-2	17
40	STRIPE A, R. BODY COVER	86832-K2V-H40	ZA			F-48-2	25
41	STRIPE A, R. FR. COVER	86642-K2V-H40	ZA			F-48-2	16
42	STRIPE B, L. BODY COVER	86835-K2V-H40	ZA			F-48-2	28
43	STRIPE B, L. FR. COVER	86645-K2V-H40	ZA			F-48-2	19
44	STRIPE B, R. BODY COVER	86834-K2V-H40	ZA			F-48-2	27
45	STRIPE B, R. FR. COVER	86644-K2V-H40	ZA			F-48-2	18
46	STRIPE C, L. FR. COVER	86649-K2V-H40	ZA			F-48-2	23
47	STRIPE C, R. FR. COVER	86648-K2V-H40	ZA			F-48-2	22
48	STRIPE, L. FR. COVER	86647-K2V-H40	ZA			F-48-2	21
49	STRIPE, L. FR. FENDER	86613-K2V-H40	ZA			F-48-2	15
50	STRIPE, R. FR. COVER	86646-K2V-H40	ZA			F-48-2	20

BOOKNo. :18K60H03

ACB125CBF (ACB125CBFR).....3PH

No.	MODEL / COLOR / CODE / Name of colored parts	Basic part No.	ACB125CBFR Pearl arctic white NH-C86P NHC86P	Applicable model Initial applicable model	 Final applicable model	Applicable block No.	Ref. No.
51	STRIPE, R. FR. FENDER	86612-K2V-H40	ZA			F-48-2	14
52	WHEEL SUB ASSY., FR.	44650-K2V-H30	ZC			F-20-41	6
53	WHEEL SUB ASSY., RR.	42650-K2V-H30	ZC			F-22-30	12

BOOKNo.:18K60H03

Block No.	Ref. No.	Part No.	Description	Reqd.QTY ACB125CBF H	K	L	M	N	P	R	Base Part No.	Parts catalogue code
F-2-1	11	32101-K2V-H30	SUB HARNESS, SPEEDOMETER.....	-	-	-	-	-	-	1	32101-K2V-N30	2PH,3PH
F-9-1	17	53290-K2V-H40ZB	COVER SET, HANDLE TOP(WL) *PB407P*.PEARL NIGHTFALL BLUE	-	-	-	-	-	-	1		3PH
			COVER SET, HANDLE TOP(WL) *TYPE5 1*.....	-	-	-	-	-	-	0	53290-K2V-H20ZF	3PH
			COVER SET, HANDLE TOP(WL) *TYPE4 1*.....	-	-	-	-	-	-	0	53290-K2V-H20ZG	3PH
			COVER SET, HANDLE TOP(WL) *TYPE3 1*.....	-	-	-	-	-	-	0	53290-K2V-H20ZH	3PH
			COVER SET, HANDLE TOP(WL) *TYPE2 1*.....	-	-	-	-	-	-	0	53290-K2V-H20ZJ	3PH
			COVER SET, HANDLE TOP(WL) *TYPE1 1*.....	-	-	-	-	-	-	0	53290-K2V-H20ZK	3PH
F-11	3	61110-K2V-H40ZB	FENDER SET, FR.(WL) *NHC86P*...PEARL ARCTIC WHITE	-	-	-	-	-	-	1		3PH
			FENDER SET, FR.(WL) *TYPE5 1*.....	-	-	-	-	-	-	0	61110-K2V-H20ZF	3PH
			FENDER SET, FR.(WL) *TYPE4 1*.....	-	-	-	-	-	-	0	61110-K2V-H20ZG	3PH
			FENDER SET, FR.(WL) *TYPE3 1*.....	-	-	-	-	-	-	0	61110-K2V-H20ZH	3PH
			FENDER SET, FR.(WL) *TYPE2 1*.....	-	-	-	-	-	-	0	61110-K2V-H20ZJ	3PH
			FENDER SET, FR.(WL) *TYPE1 1*.....	-	-	-	-	-	-	0	61110-K2V-H20ZK	3PH
F-12-2	1	64200-K2V-H20ZM	COVER SET, FR. TOP(WL) *PB407P*.PEARL NIGHTFALL BLUE	-	-	-	-	-	-	1		3PH
			COVER SET, FR. TOP(WL) *R410P*.....PEARL CRIMSON RED	-	-	-	-	-	-	0	64200-K2V-H20ZF	3PH
			COVER SET, FR. TOP(WL) *PB441M*. STELLAR BLUE METALLIC	-	-	-	-	-	-	0	64200-K2V-H20ZG	3PH

Block No.	Ref. No.	Part No.	Description	Reqd.QTY ACB125CBF H	K	L	M	N	P	R	Base Part No.	Parts catalogue code
			COVER SET, FR. TOP(WL)								64200-K2V-H20ZH	
			NHC88M.									
			OBSIDIAN BLACK METALLIC	-	-	-	-	-	-	0		3PH
			COVER SET, FR. TOP(WL)								64200-K2V-H20ZJ	
			NHC87P.									
			PEARL SYLVESTRIS GRAY	-	-	-	-	-	-	0		3PH
			COVER SET, FR. TOP(WL)								64200-K2V-H20ZK	
			NHC86P...PEARL ARCTIC WHITE	-	-	-	-	-	-	0		3PH
	2	64300-K2V-H40ZB	COVER SET, FR.(WL)									
			NHC86P...PEARL ARCTIC WHITE	-	-	-	-	-	-	1		3PH
			COVER SET, FR.(WL)								64300-K2V-H20ZF	
			TYPE5 1.....	-	-	-	-	-	-	0		3PH
			COVER SET, FR.(WL)								64300-K2V-H20ZG	
			TYPE4 1.....	-	-	-	-	-	-	0		3PH
			COVER SET, FR.(WL)								64300-K2V-H20ZH	
			TYPE3 1.....	-	-	-	-	-	-	0		3PH
			COVER SET, FR.(WL)								64300-K2V-H20ZJ	
			TYPE2 1.....	-	-	-	-	-	-	0		3PH
			COVER SET, FR.(WL)								64300-K2V-H20ZK	
			TYPE1 1.....	-	-	-	-	-	-	0		3PH
	6	64500-K2V-H40ZB	COVER SET, R. FR.(WL)									
			NHC86P...PEARL ARCTIC WHITE	-	-	-	-	-	-	1		3PH
			COVER SET, R. FR.(WL)								64500-K2V-H20ZF	
			TYPE5 1.....	-	-	-	-	-	-	0		3PH
			COVER SET, R. FR.(WL)								64500-K2V-H20ZG	
			TYPE4 1.....	-	-	-	-	-	-	0		3PH
			COVER SET, R. FR.(WL)								64500-K2V-H20ZH	
			TYPE3 1.....	-	-	-	-	-	-	0		3PH
			COVER SET, R. FR.(WL)								64500-K2V-H20ZJ	
			TYPE2 1.....	-	-	-	-	-	-	0		3PH
			COVER SET, R. FR.(WL)								64500-K2V-H20ZK	
			TYPE1 1.....	-	-	-	-	-	-	0		3PH

Block No.	Ref. No.	Part No.	Description	Reqd.QTY ACB125CBF H	K	L	M	N	P	R	Base Part No.	Parts catalogue code
	7	64600-K2V-H40ZB	COVER SET, L. FR.(WL) *NHC86P*...PEARL ARCTIC WHITE	-	-	-	-	-	-	1		3PH
			COVER SET, L. FR.(WL) *TYPE5 1*.....	-	-	-	-	-	-	0	64600-K2V-H20ZF	3PH
			COVER SET, L. FR.(WL) *TYPE4 1*.....	-	-	-	-	-	-	0	64600-K2V-H20ZG	3PH
			COVER SET, L. FR.(WL) *TYPE3 1*.....	-	-	-	-	-	-	0	64600-K2V-H20ZH	3PH
			COVER SET, L. FR.(WL) *TYPE2 1*.....	-	-	-	-	-	-	0	64600-K2V-H20ZJ	3PH
			COVER SET, L. FR.(WL) *TYPE1 1*.....	-	-	-	-	-	-	0	64600-K2V-H20ZK	3PH
	9	81131-K2V-N30ZM	COVER, RACK *NH1*.....BLACK	-	-	-	-	-	-	1		3PH
			COVER, RACK *R410P*.....PEARL CRIMSON RED	-	-	-	-	-	-	0	81131-K2V-N30ZP	3PH
			COVER, RACK *PB441M*. STELLAR BLUE METALLIC	-	-	-	-	-	-	0	81131-K2V-N30ZQ	3PH
			COVER, RACK *NHC88M*. OBSIDIAN BLACK METALLIC	-	-	-	-	-	-	0	81131-K2V-N30ZR	3PH
			COVER, RACK *NHC87P*. PEARL SYLVESTRIS GRAY	-	-	-	-	-	-	0	81131-K2V-N30ZS	3PH
			COVER, RACK *NHC86P*...PEARL ARCTIC WHITE	-	-	-	-	-	-	0	81131-K2V-N30ZT	3PH
	23	90666-K59-A11	CLIP, SNAP FITTING(PO).....	-	-	-	-	-	-	2		2PH,3PH
F-15-2	4	83450-K2V-H40ZB	COVER SET, R. BODY(WL) *NHC86P*...PEARL ARCTIC WHITE	-	-	-	-	-	-	1		3PH
			COVER SET, R. BODY(WL) *TYPE5 1*.....	-	-	-	-	-	-	0	83450-K2V-H20ZF	3PH

Block No.	Ref. No.	Part No.	Description	Reqd.QTY ACB125CBF H	K	L	M	N	P	R	Base Part No.	Parts catalogue code
			COVER SET, R. BODY(WL)								83450-K2V-H20ZG	
			TYPE4 1.....	-	-	-	-	-	-	0		3PH
			COVER SET, R. BODY(WL)								83450-K2V-H20ZH	
			TYPE3 1.....	-	-	-	-	-	-	0		3PH
			COVER SET, R. BODY(WL)								83450-K2V-H20ZJ	
			TYPE2 1.....	-	-	-	-	-	-	0		3PH
			COVER SET, R. BODY(WL)								83450-K2V-H20ZK	
			TYPE1 1.....	-	-	-	-	-	-	0		3PH
	6	83550-K2V-H40ZB	COVER SET, L. BODY(WL)									
			NHC86P...PEARL ARCTIC WHITE	-	-	-	-	-	-	1		3PH
			COVER SET, L. BODY(WL)								83550-K2V-H20ZF	
			TYPE5 1.....	-	-	-	-	-	-	0		3PH
			COVER SET, L. BODY(WL)								83550-K2V-H20ZG	
			TYPE4 1.....	-	-	-	-	-	-	0		3PH
			COVER SET, L. BODY(WL)								83550-K2V-H20ZH	
			TYPE3 1.....	-	-	-	-	-	-	0		3PH
			COVER SET, L. BODY(WL)								83550-K2V-H20ZJ	
			TYPE2 1.....	-	-	-	-	-	-	0		3PH
			COVER SET, L. BODY(WL)								83550-K2V-H20ZK	
			TYPE1 1.....	-	-	-	-	-	-	0		3PH
	8	83750-K59-A70YD	COVER, RR. CENTER									
			PB407P.PEARL NIGHTFALL BLUE	-	-	-	-	-	-	1		3PH
			COVER, RR. CENTER								83750-K59-A70YA	
			NHC88M.									
			OBSIDIAN BLACK METALLIC	-	-	-	-	-	-	0		3PH
			COVER, RR. CENTER								83750-K59-A70YB	
			NHC87P.									
			PEARL SYLVESTRIS GRAY	-	-	-	-	-	-	0		3PH
			COVER, RR. CENTER								83750-K59-A70YC	
			NHC86P...PEARL ARCTIC WHITE	-	-	-	-	-	-	0		3PH
			COVER, RR. CENTER								83750-K59-A70ZX	
			R410P.....PEARL CRIMSON RED	-	-	-	-	-	-	0		3PH

Block No.	Ref. No.	Part No.	Description	Reqd.QTY ACB125CBF H	K	L	M	N	P	R	Base Part No.	Parts catalogue code
			COVER, RR. CENTER								83750-K59-A70ZY	
			PB441M.									
			STELLAR BLUE METALLIC	-	-	-	-	-	-	0		3PH
F-20-41	6	44650-K2V-H30ZA	WHEEL SUB ASSY., FR.								44650-K2V-N30ZA	
			NH303M.									
			MAT AXIS GRAY METALLIC	-	-	-	-	-	-	1		2PH
		44650-K2V-H30ZC	WHEEL SUB ASSY., FR.									
			YR388M.									
			MAT MAGNESIUM BROWN METALLIC	-	-	-	-	-	-	1		3PH
			WHEEL SUB ASSY., FR.								44650-K2V-N30ZA	
			NH303M.									
			MAT AXIS GRAY METALLIC	-	-	-	-	-	-	0		3PH
	7	44711-K2V-H30	TIRE, FR.(MBP)								44711-K59-A71	
			(90/80-14M/C 43P)	-	-	-	-	-	-	1		2PH,3PH
F-22-30	3	42711-K2V-H30	TIRE, RR.(MBP)								42711-K59-A71	
			(100/80-14M/C 48P)	-	-	-	-	-	-	1		2PH,3PH
	12	42650-K2V-H30ZA	WHEEL SUB ASSY., RR.								42650-K2V-N30ZA	
			NH303M.									
			MAT AXIS GRAY METALLIC	-	-	-	-	-	-	1		2PH
		42650-K2V-H30ZC	WHEEL SUB ASSY., RR.									
			YR388M.									
			MAT MAGNESIUM BROWN METALLIC	-	-	-	-	-	-	1		3PH
			WHEEL SUB ASSY., RR.								42650-K2V-N30ZA	
			NH303M.									
			MAT AXIS GRAY METALLIC	-	-	-	-	-	-	0		3PH
F-24	2	77200-K2V-H30	SEAT COMP., DOUBLE.....	-	-	-	-	-	-	1	77200-K59-A70	2PH,3PH
			SEAT COMP., DOUBLE.....	-	-	-	-	-	-	1	77200-K59-H10	2PH,3PH
	8	77240-K60-T01	CABLE COMP., SEAT LOCK.....	-	-	-	-	-	-	1		2PH,3PH
F-26-1	1	16700-K2V-T01	PUMP UNIT, FUEL.....	-	-	-	-	-	-	1	16700-K2V-N31	2PH,3PH
F-28	5	17220-K2V-H30	ELEMENT SET, AIR CLEANER(WL)..	-	-	-	-	-	-	1	17220-K2V-N30	2PH,3PH
F-37	2	33415-K0W-H30	COLLAR, WINKER.....	-	-	-	-	-	-	2	33415-KZZ-J00	2PH,3PH
F-40-1	1	31500-KWN-902	BATTERY(YTZ6V)(YUASA).....	-	-	-	-	-	-	1	31500-KZR-602	2PH,3PH

F-41-2 WIRE HARNESS(ACB125CBFP/R)

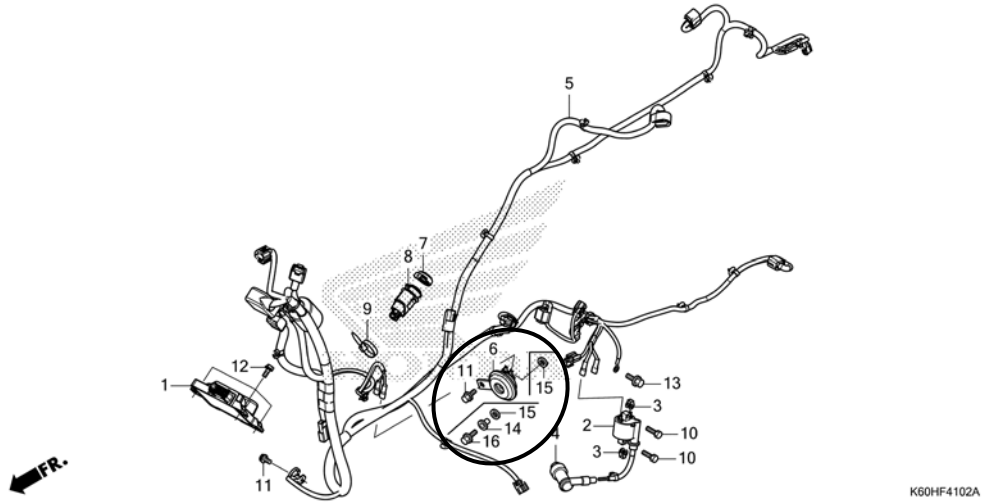

Block No.	Ref. No.	Part No.	Description	Reqd. QTY ACB125CBF H	K	L	M	N	P	R	Base Part No.	Parts catalogue code
F-41-2	1	30400-K2V-H31	CONTROL UNIT, ENGINE.....	-	-	-	-	-	-	1	30400-K2V-N32	2PH,3PH
	5	32100-K2V-H30	HARNESS, WIRE.....	-	-	-	-	-	-	1	32100-K2V-N31	2PH,3PH
	6	38110-K2V-H31	HORN COMP.(HIGH).....	-	-	-	-	-	-	1	38110-K47-M61	2PH,3PH
	11	95701-06012-00	BOLT, FLANGE, 6X12.....	-	-	-	-	-	-	1		2PH,3PH
	14	38112-KZL-A00	COLLAR, HORN SETTING.....	-	-	-	-	-	-	1		2PH,3PH
	15	61106-KW6-840	RUBBER B, MOUNTING.....	-	-	-	-	-	-	2		2PH,3PH
	16	95701-06016-00	BOLT, FLANGE, 6X16.....	-	-	-	-	-	-	1		2PH,3PH
F-42	7	50100-K2V-N32	BODY COMP., FRAME.....	-	-	-	-	-	-	1	50100-K2V-N31	2PH,3PH
	8	50350-K2V-H30	LINK ASSY., ENGINE HANGER.....	-	-	-	-	-	-	1		2PH,3PH

F-48-2 MARK/STRIPE(ACB125CBFP/R)

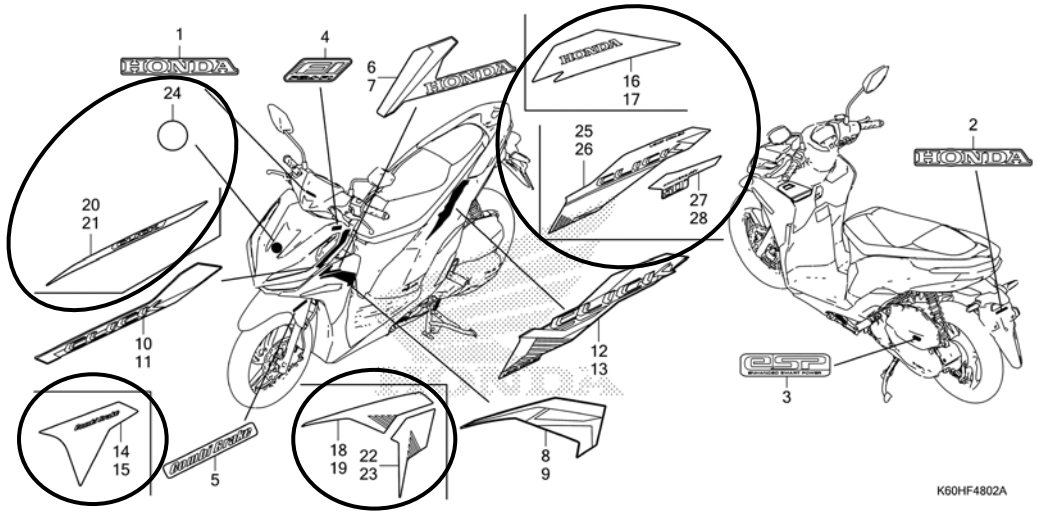

Block No.	Ref. No.	Part No.	Description	Reqd. QTY ACB125CBF H K L M N P R	Base Part No.	Parts catalogue code
F-48-2	1	86101-K2V-H40ZA	MARK, HONDA(65MM) *TYPE1*.....	- - - - - - 1	86101-K2V-H20ZE	3PH
			MARK, HONDA(65MM) *TYPE5*.....	- - - - - - 0	86101-K2V-H20ZA	3PH
			MARK, HONDA(65MM) *TYPE4*.....	- - - - - - 0	86101-K2V-H20ZB	3PH
			MARK, HONDA(65MM) *TYPE3*.....	- - - - - - 0	86101-K2V-H20ZC	3PH
			MARK, HONDA(65MM) *TYPE2*.....	- - - - - - 0	86101-K2V-H20ZD	3PH
	5		MARK(COMBI BRAKE) *TYPE5*.....	- - - - - - 0	86611-K2V-H20ZA	3PH
			MARK(COMBI BRAKE) *TYPE4*.....	- - - - - - 0	86611-K2V-H20ZB	3PH
			MARK(COMBI BRAKE) *TYPE3*.....	- - - - - - 0	86611-K2V-H20ZC	3PH

Block No.	Ref. No.	Part No.	Description	Reqd.QTY ACB125CBF H	K	L	M	N	P	R	Base Part No.	Parts catalogue code
			MARK(COMBI BRAKE)								86611-K2V-H20ZD	
			TYPE2.....	-	-	-	-	-	-	0		3PH
			MARK(COMBI BRAKE)								86611-K2V-H20ZE	
			TYPE1.....	-	-	-	-	-	-	0		3PH
	6		STRIPE A, R. FR. COVER								86642-K2V-H20ZA	
			TYPE5.....	-	-	-	-	-	-	0		3PH
			STRIPE A, R. FR. COVER								86642-K2V-H20ZB	
			TYPE4.....	-	-	-	-	-	-	0		3PH
			STRIPE A, R. FR. COVER								86642-K2V-H20ZC	
			TYPE3.....	-	-	-	-	-	-	0		3PH
			STRIPE A, R. FR. COVER								86642-K2V-H20ZD	
			TYPE2.....	-	-	-	-	-	-	0		3PH
			STRIPE A, R. FR. COVER								86642-K2V-H20ZE	
			TYPE1.....	-	-	-	-	-	-	0		3PH
	7		STRIPE A, L. FR. COVER								86643-K2V-H20ZA	
			TYPE5.....	-	-	-	-	-	-	0		3PH
			STRIPE A, L. FR. COVER								86643-K2V-H20ZB	
			TYPE4.....	-	-	-	-	-	-	0		3PH
			STRIPE A, L. FR. COVER								86643-K2V-H20ZC	
			TYPE3.....	-	-	-	-	-	-	0		3PH
			STRIPE A, L. FR. COVER								86643-K2V-H20ZD	
			TYPE2.....	-	-	-	-	-	-	0		3PH
			STRIPE A, L. FR. COVER								86643-K2V-H20ZE	
			TYPE1.....	-	-	-	-	-	-	0		3PH
	8		STRIPE B, R. FR. COVER								86644-K2V-H20ZA	
			TYPE5.....	-	-	-	-	-	-	0		3PH
			STRIPE B, R. FR. COVER								86644-K2V-H20ZB	
			TYPE4.....	-	-	-	-	-	-	0		3PH
			STRIPE B, R. FR. COVER								86644-K2V-H20ZC	
			TYPE3.....	-	-	-	-	-	-	0		3PH
			STRIPE B, R. FR. COVER								86644-K2V-H20ZD	
			TYPE2.....	-	-	-	-	-	-	0		3PH

Block No.	Ref. No.	Part No.	Description	Reqd.QTY ACB125CBF H	K	L	M	N	P	R	Base Part No.	Parts catalogue code
			STRIPE B, R. FR. COVER								86644-K2V-H20ZE	
			TYPE1.....	-	-	-	-	-	-	0		3PH
	9		STRIPE B, L. FR. COVER								86645-K2V-H20ZA	
			TYPE5.....	-	-	-	-	-	-	0		3PH
			STRIPE B, L. FR. COVER								86645-K2V-H20ZB	
			TYPE4.....	-	-	-	-	-	-	0		3PH
			STRIPE B, L. FR. COVER								86645-K2V-H20ZC	
			TYPE3.....	-	-	-	-	-	-	0		3PH
			STRIPE B, L. FR. COVER								86645-K2V-H20ZD	
			TYPE2.....	-	-	-	-	-	-	0		3PH
			STRIPE B, L. FR. COVER								86645-K2V-H20ZE	
			TYPE1.....	-	-	-	-	-	-	0		3PH
	10		STRIPE, R. FR. COVER								86646-K2V-H20ZA	
			TYPE5.....	-	-	-	-	-	-	0		3PH
			STRIPE, R. FR. COVER								86646-K2V-H20ZB	
			TYPE4.....	-	-	-	-	-	-	0		3PH
			STRIPE, R. FR. COVER								86646-K2V-H20ZC	
			TYPE3.....	-	-	-	-	-	-	0		3PH
			STRIPE, R. FR. COVER								86646-K2V-H20ZD	
			TYPE2.....	-	-	-	-	-	-	0		3PH
			STRIPE, R. FR. COVER								86646-K2V-H20ZE	
			TYPE1.....	-	-	-	-	-	-	0		3PH
	11		STRIPE, L. FR. COVER								86647-K2V-H20ZA	
			TYPE5.....	-	-	-	-	-	-	0		3PH
			STRIPE, L. FR. COVER								86647-K2V-H20ZB	
			TYPE4.....	-	-	-	-	-	-	0		3PH
			STRIPE, L. FR. COVER								86647-K2V-H20ZC	
			TYPE3.....	-	-	-	-	-	-	0		3PH
			STRIPE, L. FR. COVER								86647-K2V-H20ZD	
			TYPE2.....	-	-	-	-	-	-	0		3PH
			STRIPE, L. FR. COVER								86647-K2V-H20ZE	
			TYPE1.....	-	-	-	-	-	-	0		3PH

Block No.	Ref. No.	Part No.	Description	Reqd.QTY ACB125CBF H	K	L	M	N	P	R	Base Part No.	Parts catalogue code
	12		STRIPE, R. BODY COVER *TYPE5*.....	-	-	-	-	-	-	0	86832-K2V-H20ZA	3PH
			STRIPE, R. BODY COVER *TYPE4*.....	-	-	-	-	-	-	0	86832-K2V-H20ZB	3PH
			STRIPE, R. BODY COVER *TYPE3*.....	-	-	-	-	-	-	0	86832-K2V-H20ZC	3PH
			STRIPE, R. BODY COVER *TYPE2*.....	-	-	-	-	-	-	0	86832-K2V-H20ZD	3PH
			STRIPE, R. BODY COVER *TYPE1*.....	-	-	-	-	-	-	0	86832-K2V-H20ZE	3PH
	13		STRIPE, L. BODY COVER *TYPE5*.....	-	-	-	-	-	-	0	86833-K2V-H20ZA	3PH
			STRIPE, L. BODY COVER *TYPE4*.....	-	-	-	-	-	-	0	86833-K2V-H20ZB	3PH
			STRIPE, L. BODY COVER *TYPE3*.....	-	-	-	-	-	-	0	86833-K2V-H20ZC	3PH
			STRIPE, L. BODY COVER *TYPE2*.....	-	-	-	-	-	-	0	86833-K2V-H20ZD	3PH
			STRIPE, L. BODY COVER *TYPE1*.....	-	-	-	-	-	-	0	86833-K2V-H20ZE	3PH
	14	86612-K2V-H40ZA	STRIPE, R. FR. FENDER *TYPE1*.....	-	-	-	-	-	-	1		3PH
	15	86613-K2V-H40ZA	STRIPE, L. FR. FENDER *TYPE1*.....	-	-	-	-	-	-	1		3PH
	16	86642-K2V-H40ZA	STRIPE A, R. FR. COVER *TYPE1*.....	-	-	-	-	-	-	1		3PH
	17	86643-K2V-H40ZA	STRIPE A, L. FR. COVER *TYPE1*.....	-	-	-	-	-	-	1		3PH
	18	86644-K2V-H40ZA	STRIPE B, R. FR. COVER *TYPE1*.....	-	-	-	-	-	-	1		3PH
	19	86645-K2V-H40ZA	STRIPE B, L. FR. COVER *TYPE1*.....	-	-	-	-	-	-	1		3PH

BOOKNo.:18K60H03

Block No.	Ref. No.	Part No.	Description	Reqd.QTY ACB125CBF H	K	L	M	N	P	R	Base Part No.	Parts catalogue code
	20	86646-K2V-H40ZA	STRIPE, R. FR. COVER *TYPE1*.....	-	-	-	-	-	-	1		3PH
	21	86647-K2V-H40ZA	STRIPE, L. FR. COVER *TYPE1*.....	-	-	-	-	-	-	1		3PH
	22	86648-K2V-H40ZA	STRIPE C, R. FR. COVER *TYPE1*.....	-	-	-	-	-	-	1		3PH
	23	86649-K2V-H40ZA	STRIPE C, L. FR. COVER *TYPE1*.....	-	-	-	-	-	-	1		3PH
	24	86651-K2V-H40ZA	MARK(50TH ANNIVERSARY) *TYPE1*.....	-	-	-	-	-	-	1		3PH
	25	86832-K2V-H40ZA	STRIPE A, R. BODY COVER *TYPE1*.....	-	-	-	-	-	-	1		3PH
	26	86833-K2V-H40ZA	STRIPE A, L. BODY COVER *TYPE1*.....	-	-	-	-	-	-	1		3PH
	27	86834-K2V-H40ZA	STRIPE B, R. BODY COVER *TYPE1*.....	-	-	-	-	-	-	1		3PH
	28	86835-K2V-H40ZA	STRIPE B, L. BODY COVER *TYPE1*.....	-	-	-	-	-	-	1		3PH