HONDA

Owner's Manual

GIORNO+

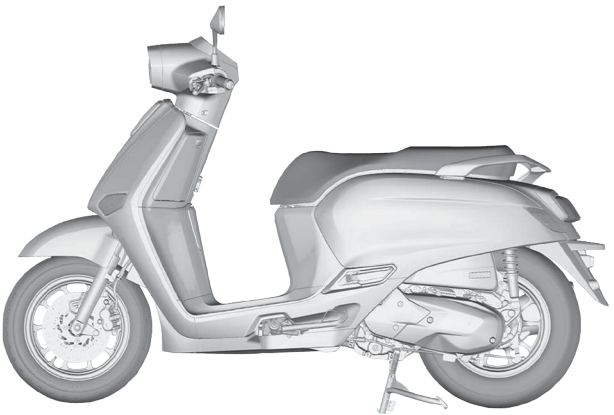

Please read this manual carefully before riding

ACF125CAR

Customer Relation Section

Customer Relation Section's Information

N.C.X Company Co., Ltd pleased to inform that Our company has created Customer Relation Section in order to help customer easier to contact to our company in case that they have any inquiries or questions related with company such as Product, Services, or another information.

CR Section will kindly provide the discussion, answering to all kind of inquiries, and all customer doubts with our experienced and professional staffs.

How can you contact to CR Section?

Customer can contact to CR by the following:

Tel : 010 922 922
E-mail : cr@ncxhonda.com.kh
Working Hours : 08:00AM-05:00PM
Working Days : Every Monday to Saturday (except National Holidays and Company Holiday)

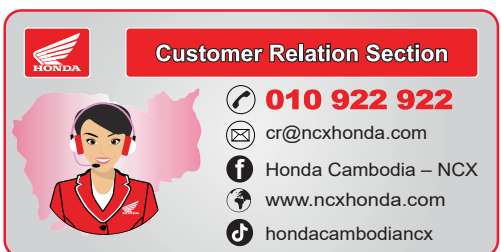

This manual should be considered a permanent part of the vehicle and should remain with the vehicle when it is resold.

This publication includes the latest production information available before printing. Honda Motor Co., Ltd. reserves the right to make changes at any time without notice and without incurring any obligation.

No part of this publication may be reproduced without written permission.

The vehicle pictured in this owner's manual may not match your actual vehicle.

© 2023 Honda Motor Co., Ltd.

Welcome

Congratulations on your purchase of a new Honda vehicle. Your selection of a Honda makes you part of a worldwide family of satisfied customers who appreciate Honda's reputation for building quality into every product.

To ensure your safety and riding pleasure:

- Read this owner's manual carefully.
- Follow all recommendations and procedures contained in this manual.
- Pay close attention to safety messages contained in this manual and on the vehicle.
- The following codes in this manual indicate each destination.
- The illustrations here in are based on the ACF125CA TH type.

Destination Code

Code	Destination
ACF125CA	
AD	Asia direct, Macao
CA	Cambodia
TH	Thailand
ACF125CB	
LO	Laos
TH, II TH	Thailand

*The specifications may vary with each locale.

A Few Words About Safety

Your safety, and the safety of others, is very important. Operating this vehicle safely is an important responsibility.
To help you make informed decisions about safety, we have provided operating procedures and other information on safety labels and in this manual. This information alerts you to potential hazards that could hurt you or others.
Of course, it is not practical or possible to warn you about all hazards associated with operating or maintaining a vehicle. You must use your own good judgement.

You will find important safety information in a variety of forms, including:

- Safety labels on the vehicle
- Safety Messages preceded by a safety alert symbol ⚠ and one of three signal words: DANGER, WARNING, or CAUTION. These signal words mean:

⚠DANGER

You WILL be KILLED or SERIOUSLY HURT if you don't follow instructions.

⚠WARNING

You CAN be KILLED or SERIOUSLY HURT if you don't follow instructions.

⚠CAUTION

You CAN be HURT if you don't follow instructions.

Other important information is provided under the following titles:

NOTICE Information to help you avoid damage to your vehicle, other property, or the environment.

Contents

Vehicle Safety P. 2

Operation Guide P. 16

Maintenance P. 76

Troubleshooting P. 109

Information P. 132

Specifications P. 146

Vehicle Safety

This section contains important information for safe riding of your vehicle.
Please read this section carefully.

Safety Guidelines ..... P. 3
Image Labels ..... P. 6
Safety Precautions ..... P. 8
Riding Precautions ..... P. 9
Accessories & Modifications ..... P. 13
Loading ..... P. 14

Safety Guidelines

Follow these guidelines to enhance your safety:

- Perform all routine and regular inspections specified in this manual.
- Stop the engine and keep sparks and flames away before filling the fuel tank.
- Do not run the engine in enclosed or partly enclosed areas. Carbon monoxide in exhaust gases is toxic and can kill you.

Always Wear a Helmet

It's a proven fact: helmets and protective apparel significantly reduce the number and severity of head and other injuries. So always wear an approved helmet and protective apparel. ➔P. 8

Before Riding

Make sure that you are physically fit, mentally focused, and free of alcohol and drugs. Check that you and your passenger are both wearing an approved helmet and protective apparel. Instruct your passenger on holding onto the grab rail or your waist, leaning with you in turns, and keeping their feet on the footpegs, even when the vehicle is stopped.

Take Time to Learn & Practice

Even if you have ridden other vehicles, practice riding in a safe area to become familiar with how this vehicle works and handles, and to become accustomed to the vehicle's size and weight.

Ride Defensively

Always pay attention to other vehicles around you, and do not assume that other drivers see you. Be prepared to stop quickly or perform an evasive maneuver.

Continued

Make Yourself Easy to See

Make yourself more visible, especially at night, by wearing bright reflective clothing, positioning yourself so other drivers can see you, signaling before turning or changing lanes, and using your horn when necessary.

Ride within Your Limits

Never ride beyond your personal abilities or faster than conditions warrant. Fatigue and inattention can impair your ability to use good judgement and ride safely.

Don't Drink or Use Drugs and Ride

Alcohol or drugs and riding don't mix. Even one alcoholic drink can reduce your ability to respond to changing conditions, and your reaction time gets worse with every additional drink. The same is true for drug use. Don't drink or use and ride, and don't let your friends do it either.

Keep Your Honda in Safe Condition

It's important to keep your vehicle properly maintained and in safe riding condition. Inspect your vehicle before every ride and perform all recommended maintenance. Never exceed load limits (P. 14), and do not modify your vehicle or install accessories that would make your vehicle unsafe (P. 13).

If You are Involved in a Crash

Personal safety is your first priority. If you or anyone else has been injured, take time to assess the severity of the injuries and whether it is safe to continue riding. Call for emergency assistance if needed. Also follow applicable laws and regulations if another person or vehicle is involved in the crash.

If you decide to continue riding, first turn the ignition switch to the ○ (Off) position, and evaluate the condition of your vehicle. Inspect for fluid leaks, check the tightness of critical nuts and bolts, and check the handlebar, control levers, brakes, and wheels. Ride slowly and cautiously.
Your vehicle may have suffered damage that is not immediately apparent. Have your vehicle thoroughly checked at a qualified service facility as soon as possible.

Carbon Monoxide Hazard

Exhaust contains poisonous carbon monoxide, a colourless, odorless gas. Breathing carbon monoxide can cause loss of consciousness and may lead to death.

If you run the engine in a confined or even partly enclosed area, the air you breathe could contain a dangerous amount of carbon monoxide.

Never run your vehicle inside a garage or other enclosure.

⚠WARNING

Running the engine of your vehicle while in an enclosed or even partially enclosed area can cause a rapid build-up of toxic carbon monoxide gas.

Breathing this colourless, odorless gas can quickly cause unconsciousness and lead to death.

Only run your vehicle's engine when it is located in a well ventilated area outdoors.

Image Labels

The following pages describe the label meanings. Some labels warn you of potential hazards that could cause serious injury. Others provide important safety information. Read this information carefully and don't remove the labels.

If a label comes off or becomes hard to read, contact your dealer for a replacement.

There is a specific symbol on each label. The meanings of each symbol and label are as follows.



Read instructions contained in Owner's Manual carefully.



Read instructions contained in Shop Manual carefully. In the interest of safety, take the vehicle to be serviced only by your dealer.



DANGER (with RED background)
You WILL be KILLED or SERIOUSLY HURT if you don't follow instructions.
WARNING (with ORANGE background)
You CAN be KILLED or SERIOUSLY HURT if you don't follow instructions.
CAUTION (with YELLOW background)
You CAN be HURT if you don't follow instructions.



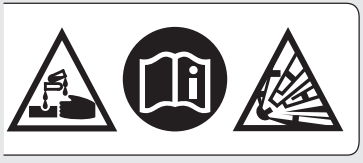

BATTERY LABEL
DANGER

- Keep flame and spark away from the battery. Battery produce explosive gas that can cause explosion.
- Wear the eye protection and rubber gloves when handling the battery, or you can get burned or lose your eyesight by the battery electrolyte.
- Do not allow children and other people to touch a battery unless they understand proper handling and hazards of the battery very well.
- Handle the battery electrolyte with extreme care as it contains dilute sulfuric acid. Contact with your skin or eyes can burn you or cause loss of your eyesight.
- Read this manual carefully and understand it before handling the battery. Neglect of the instructions can cause personal injury and damage to the vehicle.
- Do not use a battery with the electrolyte at or below the lower level mark. It can explode causing serious injury.

Safety Precautions

- Ride cautiously and keep your hands on the handlebar and feet on the floor.
- Instruct your passenger to keep their hands on the grab rail or your waist and their feet on the footpegs while riding.
- Always consider the safety of your passenger, as well as other drivers and riders.

Protective Apparel

Make sure that you and any passenger are wearing an approved helmet, eye protection, and high-visibility protective clothing. Avoid wearing loose clothes that could get caught on any part of the vehicle. Ride defensively in response to weather and road conditions.

Helmet

Safety-standard certified, high-visibility, correct size for your head

- Must fit comfortably but securely, with the chin strap fastened
- Face shield with unobstructed field of vision or other approved eye protection

⚠WARNING

Not wearing a helmet increases the chance of serious injury or death in a crash.

Make sure that you and any passenger always wear an approved helmet and protective apparel.

Gloves

Full-finger leather gloves with high abrasion resistance

Boots or Riding Shoes

Sturdy boots with non-slip soles and ankle protection

Jacket and Trousers

Protective, highly visible, long-sleeved jacket and durable trousers for riding (or a protective suit)

Riding Precautions

Running-in Period

During the first 500 km (300 miles) of running, follow these guidelines to ensure your vehicle's future reliability and performance.

- Avoid full-throttle starts and rapid acceleration.
- Avoid hard braking.
- Ride conservatively.

Brakes

Observe the following guidelines:

- Avoid excessively hard braking.
  - ▶ Sudden braking can reduce the vehicle's stability.
  - ▶ Where possible, reduce speed before turning; otherwise you risk sliding out.
- Exercise caution on low traction surfaces.
  - ▶ The tyres slip more easily on such surfaces and braking distances are longer.
- Avoid continuous braking.
  - ▶ Repeated braking, such as when descending long, steep slopes can seriously overheat the brakes, reducing their effectiveness.
- For full braking effectiveness, operate both the front and rear brakes together.

Anti-lock Brake System (ABS) on Front Wheel

ACF125CA

This model equipped with an Anti-lock Brake System (ABS) designed to help prevent the front brake from locking up during hard braking.

- There is no ABS function to the rear wheel.
- ABS does not reduce braking distance. In certain circumstances, ABS may result in a longer stopping distance.

Continued

- ABS does not function at speeds below 10 km/h (6 mph).
- The front brake lever may recoil slightly when applying the brakes. This is normal.
- Always use the recommended front/rear tyres to ensure correct ABS operation.

Combi Brake

ACF125CB

Your vehicle is equipped with a brake system that distributes the braking force between the front and rear brakes.
The distribution of the braking force applied to the front and rear brakes when operating the front brake lever only and when operating the rear brake lever only is different.
For full braking effectiveness, operate both the front and rear brakes together.

Wet or Rainy Conditions

Road surfaces are slippery when wet, and wet brakes further reduce braking efficiency. Exercise extra caution when braking in wet conditions.
If the brakes get wet, apply the brakes while riding at low speed to help them dry.

Parking

- Park on a firm, level surface.
- If you must park on a slight incline or loose surface, park so that the vehicle cannot move or fall over.
- Make sure that high-temperature parts cannot come into contact with flammable materials.
- Do not touch the engine, muffler, brakes and other high-temperature parts until they cool down.

- To reduce the likelihood of theft, always lock the handlebar, lock the ignition switch (P. 41) and leave your vehicle while taking the Honda SMART Key with you. Deactivate the Honda SMART Key system if necessary. P. 36
  Use of an anti-theft device is also recommended.
  Also set the anti-theft alarm system.

Parking with the Side Stand or Centre Stand

1. Stop the engine.
2. **Using the side stand**
   Push the side stand down.
   Slowly lean the vehicle to the left until its weight rests on the side stand.
   Using the centre stand
   To lower the centre stand, stand on the left side of the vehicle.
   Hold the left handle grip and the grab rail.
   Press down on the tip of the centre stand with your right foot and, simultaneously, pull up and back.

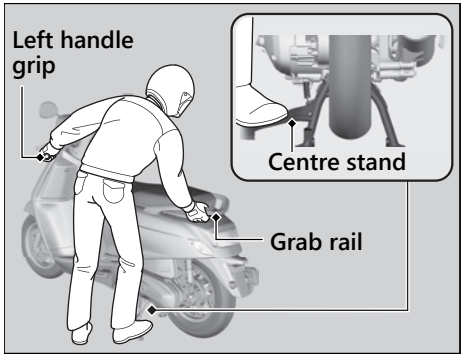

3. Turn the handlebar fully to the left.
   ▶ Turning the handlebar to the right reduces stability and may cause the vehicle to fall.
4. Turn the ignition switch to the (Lock) position (P. 34) and lock the ignition switch (P. 41).
5. Set the anti-theft alarm system. P. 44

Continued

Refuelling and Fuel Guidelines

Follow these guidelines to protect the engine, fuel system and catalytic converter:

- Use only unleaded petrol.
- Use the recommended octane number. Using lower octane petrol will result in decreased engine performance.
- Do not use fuels containing a high concentration of alcohol. ➔ P. 144
- Do not use stale or contaminated petrol or an oil/petrol mixture.
- Avoid getting dirt or water in the fuel tank.

Accessories & Modifications

We strongly advise that you do not add any accessories that were not specifically designed for your vehicle by Honda or make modifications to your vehicle from its original design. Doing so can make it unsafe. Modifying your vehicle may also void your warranty and make your vehicle illegal to operate on public roads. Before deciding to install accessories on your vehicle, be certain the modification is safe and legal.

⚠WARNING

Improper accessories or modifications can cause a crash in which you can be seriously hurt or killed.

Follow all instructions in this owner's manual regarding accessories and modifications.

Do not pull a trailer with, or attach a sidecar to, your vehicle. Your vehicle was not designed for these attachments, and their use can seriously impair your vehicle's handling.

Loading

- Carrying extra weight affects your vehicle's handling, braking and stability.
  Always ride at a safe speed for the load you are carrying.
- Avoid carrying an excessive load and keep within specified load limits.
  Maximum weight capacity / Maximum luggage weight P. 146
- Tie all luggage securely, evenly balanced, and close to the centre of the vehicle.
- Do not place objects near the lights or the muffler.

⚠WARNING

Overloading or improper loading can cause a crash and you can be seriously hurt or killed.

Follow all load limits and other loading guidelines in this manual.

Basic Operation Flow

Pre-ride Inspection P.81

Carefully inspect your vehicle to make sure that it is safe to ride.

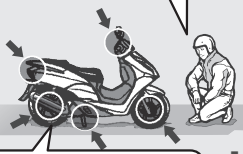

How to use basic features.

- Instruments P.20
- Indicators P.28
- Switches P.32
- Steering Lock P.34
- Anti-theft Alarm System P.44
- Answer Back System P.49
- Honda SMART Key System P.35
- Idling Stop System P.57

Starting the Engine P.60

Start and warm the engine. Avoid revving the engine.

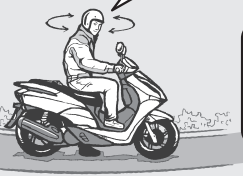

Acceleration P.64

Apply throttle gradually. Obey the speed limit.





Starting the Vehicle P.64

Before pulling away, indicate your direction with the turn signal switch, and check for oncoming traffic.

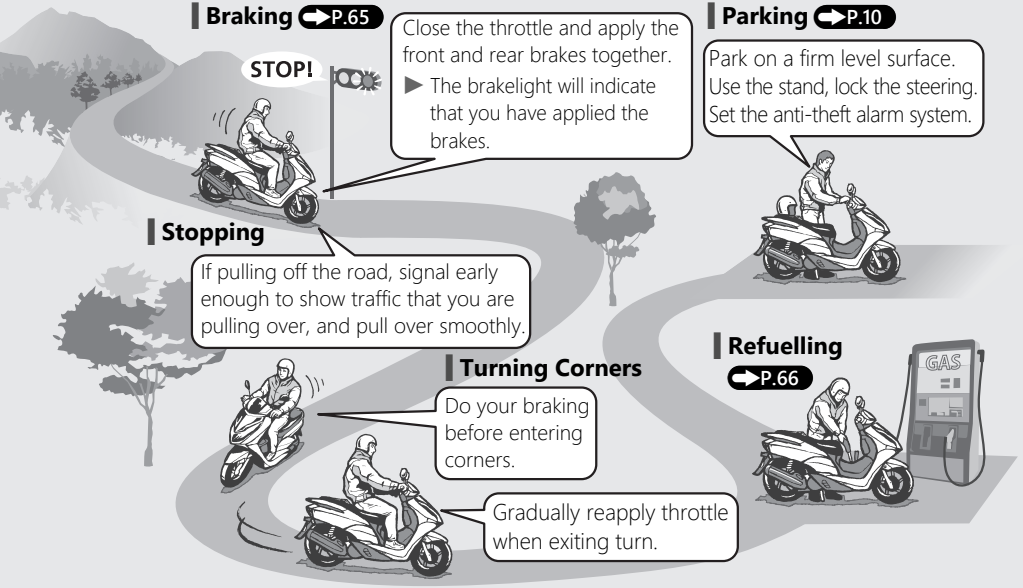
Braking P.65
Close the throttle and apply the front and rear brakes together.
▶ The brakelight will indicate that you have applied the brakes.
STOP!
Parking P.10
Park on a firm level surface.
Use the stand, lock the steering.
Set the anti-theft alarm system.
Stopping
If pulling off the road, signal early enough to show traffic that you are pulling over, and pull over smoothly.
Turning Corners
Do your braking before entering corners.
Gradually reapply throttle when exiting turn.
Refuelling
P.66
GAS

Parts Location

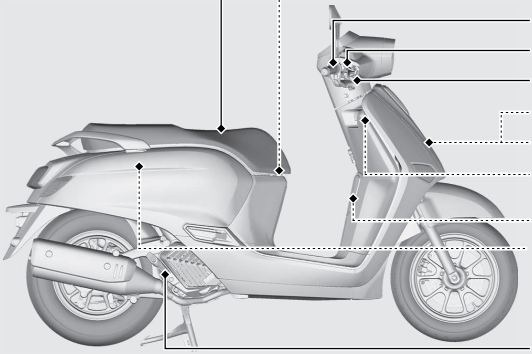

Seat P.71

Helmet holder P.72

Throttle grip P.105

Front brake fluid reservoir P.98

Front brake lever

Fuse box P.130

Battery P.91

Emergency seat opener P.121

Fuel fill cap P.66

Coolant reserve tank P.96

Engine oil fill cap/dipstick P.94

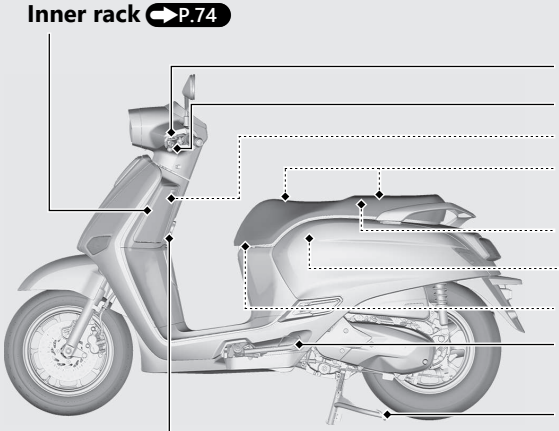

Inner rack P.74

Rear brake lock lever P.55

Rear brake lever P.100

USB socket P.69

Tools P.73

Document bag P.73

Centre compartment P.73

Helmet holder P.72

Side stand P.104

Centre stand P.11

Hook P.75

Instruments

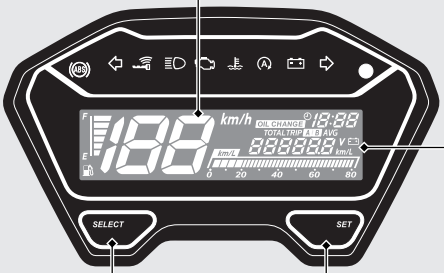

Speedometer
This shows your speed in kilometer per hour (km/h).

SELECT button

SET button

Display Check

When the ignition switch is turned to the | (On) position, the display will temporarily show all the modes and digital segments so you can make sure the liquid crystal display is functioning properly.
If any part of these displays does not come on when it should, have your dealer check for problems.

Fuel gauge

Remaining fuel when only 1st (E) segment starts flashing: approximately 1.5 L (0.40 US gal, 0.33 Imp gal).

If the fuel gauge indicator flashes in a repeat pattern or turns off: P.115



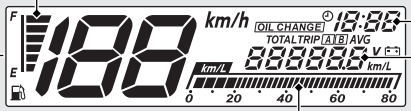

Clock (12-hour display)

To set the clock: P.26

Odometer [TOTAL]/Tripmeter [TRIP A/B]/Average fuel mileage meter [AVG]/Battery voltage meter [V] P.22

Current fuel mileage meter

Current instant fuel mileage.

Display range: 0 to 80 km/L.

- If the calculated value is 80 km/L or more: "80 km/L" is displayed.
- When your speed is less than about 3 km/h : "0" is displayed.

When "0" is displayed at speeds above 3 km/h, go to your dealer for service.

Instruments *(Continued)*

Odometer [TOTAL]/Tripmeter [TRIP A/B]/Average fuel mileage meter [AVG]/ Battery voltage meter [V]

SELECT button selects the odometer, tripmeter A, tripmeter B, average fuel mileage, and battery voltage.

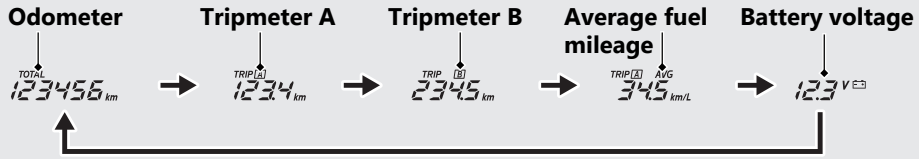

Odometer

Total distance ridden.

When "------" is displayed, go to your dealer for service.

Tripmeter

Distance ridden since tripmeter A or tripmeter B respectively were reset.

- To reset tripmeter A, press and hold **SET** button while tripmeter A is displayed. When to reset tripmeter A, the average fuel mileage is also reset.
- To reset tripmeter B, press and hold **SET** button while tripmeter B is displayed.

When "---.-" is displayed, go to your dealer for service.

Average fuel mileage meter

The average fuel mileage will be based on tripmeter A.
Average fuel mileage since tripmeter A was reset.
Display range: 0.0 to 99.9 km/L.

- If the calculated value is 99.9 km/L or more: "99.9 km/L" is displayed.
- When the tripmeter A is reset: "--.-" is displayed.

When "--.-" is displayed except after the average fuel mileage has been reset, go to your dealer for service.

Battery voltage meter

Displays the current voltage.

Instruments *(Continued)*

OIL CHANGE indicator

The indicator is turned on whenever the running distance reaches the programed oil change interval.

- ▶ When the running distance reaches about 1,000 km:
  Reset the indicator after changing the engine oil for the 1st time.
- ▶ When the running distance reaches about every 6,000 km after the 1st time resetting:
  Reset the indicator after changing the engine oil.

After changing the engine oil, be sure to reset the indicator.

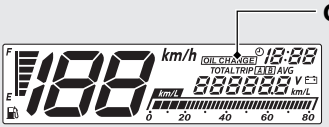

To reset the indicator, press and hold the **SET** button while turning the ignition switch to the ❙ (On) position, and keep holding the **SET** button for more than 3 seconds.

- ▶ The indicator does not go off until it is reset.
- ▶ If the oil is changed before the OIL CHANGE indicator comes on, be sure to reset the OIL CHANGE indicator after changing the oil. When resetting the indicator during no indication, the indicator will appear for 2 seconds, then disappear.

You can change the setting of the distance until the OIL CHANGE indicator lights again.

To set the OIL CHANGE indicator: P.25

Display Setting

Following items can be changed sequentially.

- Clock setting
- OIL CHANGE indicator setting

The following moves the ordinary display at display setting.

- The button is not pressed for about 30 seconds
- Turn the ignition switch to the ○ (Off) position and then to the | (On) position

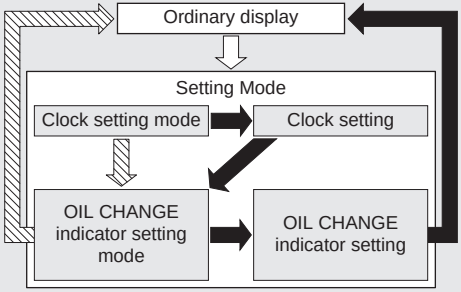

⇨ Press and hold **SELECT** button and **SET** button

➡ Press **SET** button

⇨ Press **SELECT** button

Instruments *(Continued)*

1 Clock setting:

1. Turn the ignition switch to the ❙ (On) position.
2. Press and hold **SELECT** button and **SET** button, all clock digits start flashing.
3. Press **SET** button, the hour digits start flashing.
4. Press **SELECT** button until the desired hour is displayed.
   ▶ Press and hold to advance the hour fast.



5. Press **SET** button. The minute digits start flashing.



6. Press **SELECT** button until the desired minute is displayed.
   ▶ Press and hold to advance the minute fast.



7. Press **SET** button. The clock is set, and then the display moves to the interval value of OIL CHANGE indicator.
   The OIL CHANGE indicator start flashing and interval value of OIL CHANGE indicator is displayed.

2 OIL CHANGE indicator setting:
The indicator is turned on whenever the running distance reaches the programmed oil change interval.
You can adjust the interval value of OIL CHANGE indicator.

1. Press **SET** button. The interval value of OIL CHANGE indicator start flashing.



2. Press **SELECT** button until the desired value is displayed.
   ▶ The oil change interval can be set every 500 km (300 miles) within the range 500 to 6,000 km (300 to 4,000 miles).



3. Press **SET** button. The interval value of OIL CHANGE indicator is set.

The established setting can also be set by turning the ignition switch to the ○ (Off) position.

The control is automatically switched from the setting mode to the ordinary display if the switch is not pressed for about 30 seconds.
In this case, undecided settings will not be maintained.

Indicators

If one of these indicators does not come on when it should, have your dealer check for problems.

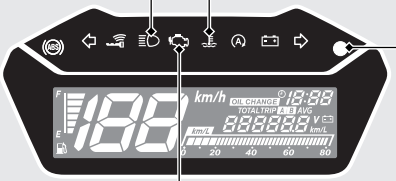

High beam indicator

High coolant temperature indicator
If it comes on while riding: P.111

Alarm indicator
Anti-theft Alarm system: P.44

PGM-FI (Programmed Fuel Injection) malfunction indicator lamp (MIL)
Comes on briefly when the ignition switch is turned to the | (On) position
If it comes on while engine is running: P.112

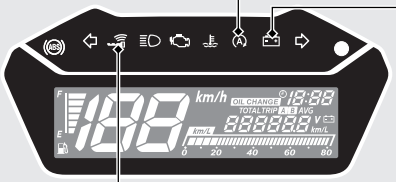

Ⓐ Idling Stop indicator

Comes on briefly when the Idling Stop switch in the Ⓐ (Idling stop) with the ignition switch turned on.

Idling Stop system: P.57

Battery Charging Condition indicator

When the Battery Charging Condition indicator on: P.112

Honda SMART Key Indicator

Comes on when vehicle and Honda SMART Key verification is complete, and the ignition switch can be operated.

Goes off when the ignition switch is turned to the ❙ (On) position.

When the Honda SMART Key Indicator Flashes: P.114

Continued

Indicators *(Continued)*



⇦ Left turn signal indicator

⇨ Right turn signal indicator

(ABS) ABS (Anti-lock Brake System) indicator

ACF125CA

Comes on when the ignition switch is turned to the ❙ (On) position.
Goes off when your speed reaches approximately 10 km/h (6 mph).
If it comes on while riding: P.113

Switches

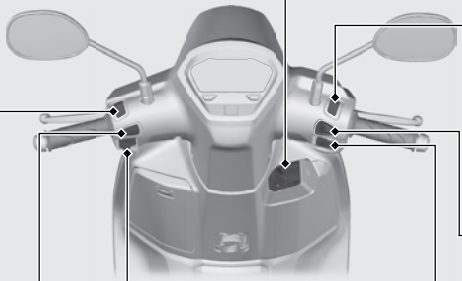

Idling stop switch

- Ⓐ : The Idling Stop system is on.
- Ⓐ OFF : The Idling Stop system is off.

Idling Stop system: P.57

Headlight switch

CA type only

- : Headlight, taillight, position light, and license plate light on.
- • : Headlight, taillight, position light, and license plate light off.

Start button

Turn signal switch

▶ Pressing the switch turns the turn signal off.

Horn button

Headlight dimmer switch

- : High beam
- : Low beam

⏻ Ignition switch
Switches the electrical system on/off, locks the steering, and operates the fuel lid and seat opener switch.
To unlock the ignition switch:
P.40

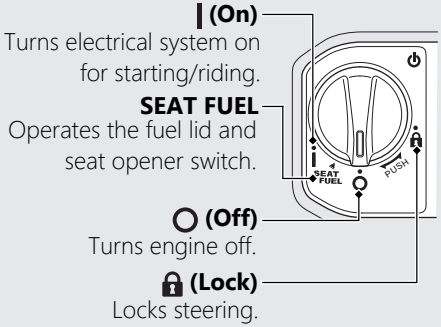

Switches *(Continued)*

Steering Lock

Lock the steering when parking to help prevent theft.
A U-shaped wheel lock or similar device is also recommended.

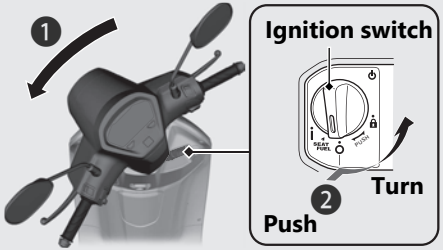

Locking

1. Turn the handlebar all the way to the left or right.
2. Push the ignition switch down, and turn it to the (Lock) position.
   - ▶ To unlock the ignition switch P.40
   - ▶ Jiggle the handlebar if the lock is difficult to engage.
3. Lock the ignition switch.

Unlocking

Push the ignition switch in, and turn it to the (Off) position.

- ▶ To unlock the ignition switch P.40

Honda SMART Key System

The Honda SMART Key system allows you to operate the ignition switch without inserting a key into a keyhole.
The system runs a two-way authentication between the vehicle and the Honda SMART Key to verify if it is the registered Honda SMART Key.

The Honda SMART Key system uses low-intensity radio waves. It may affect medical equipment such as a cardiac pacemaker.

Honda SMART Key System *(Continued)*

Switching the Honda SMART Key System

To switch the Honda SMART Key system to activation or deactivation

Press the ON/OFF button until the Honda SMART Key LED changes colour.

To check the Honda SMART Key system status

Lightly press the ON/OFF button. The Honda SMART Key LED will show the status.
When the Honda SMART Key LED is:

Green: (active)	Honda SMART Key system authentication can be performed.
Red: (inactive)	Honda SMART Key system authentication cannot be performed.

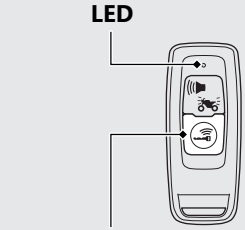

Operating Range

The operating range varies when the ignition switch is locked or unlocked.

The Honda SMART Key system uses low-intensity radio waves. Therefore, the operating range may be wider or narrower, or the Honda SMART Key system may not work properly in the following situations:

- When the Honda SMART Key battery is depleted.
- When there are facilities nearby that generate strong radio waves or noise, such as TV towers, power stations, radio stations, or airports.
- When you carry the Honda SMART Key with a laptop or wireless communication device such as a radio or mobile phone.
- When the Honda SMART Key comes into contact with or is covered by metal objects.

When the ignition switch is unlocked:

The system can be operated within the shaded area shown in the illustration.

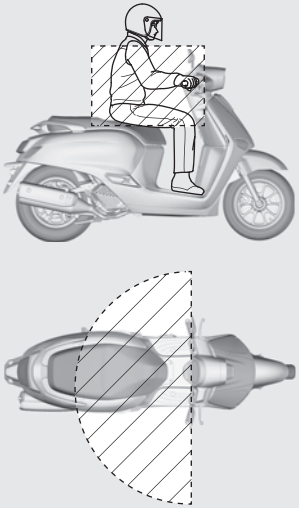

Honda SMART Key System *(Continued)*

When the ignition switch is locked:

The system can be operated within the shaded area shown in the illustration.

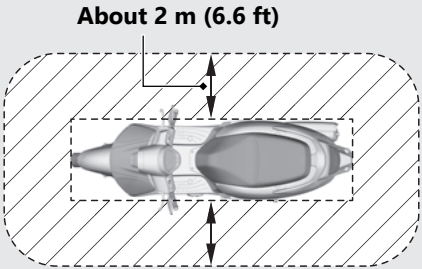

Anyone can unlock the ignition switch and start the engine if your Honda SMART Key is within operating range of your vehicle, even if you are on the other side of a wall or window. If you are away from your vehicle but your Honda SMART Key is still within operating range, deactivate the Honda SMART Key system.

To switching the Honda SMART Key system P.36

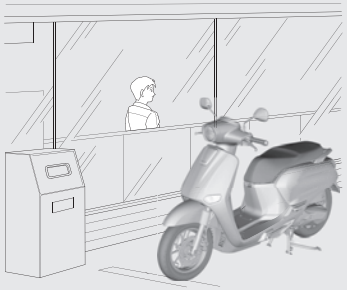

Anyone in possession of the Honda SMART Key can perform the following operations if the Honda SMART Key is within operating range:

- Starting the engine
- Unlocking the ignition switch
- Unlocking the seat lock
- Unlocking the steering lock
- Opening the fuel lid

You should always keep the Honda SMART Key on your person after you get on and off the vehicle or while riding.

Do not store the Honda SMART Key in any compartment.

If the ignition switch is in the ❙ (On) position, the vehicle can be operated even by a person who does not have a verified Honda SMART Key.

Whenever you leave your vehicle, lock the steering and lock the ignition switch.

➡P.41

Make sure the Honda SMART Key indicator goes off, all turn signals flash once, and buzzer rings at this time.

Honda SMART Key System *(Continued)*

Switching the ignition switch

To Unlock the Ignition Switch

1. Make sure that the Honda SMART Key system is activated. P.36
2. To authenticate the Honda SMART Key system, push the ignition switch.
   - ▶ When properly authenticated and the ignition switch is unlocked, the Honda SMART Key indicator comes on. The buzzer also rings 2 times at this time.
   - ▶ The buzzer sound can be cancelled. P.42
3. Turn the ignition switch to the | (On) position while the Honda SMART Key indicator comes on.
   - ▶ If you do not turn the ignition switch to the | (On) position within 20 seconds after pushing in the ignition switch, the Honda SMART Key indicator will go off, the turn signals flash once, the buzzer rings 1 time, and then the ignition switch will be locked.

When the Honda SMART Key system does not work properly P.119

If someone without the Honda SMART Key tries to turn the ignition switch, the ignition switch rotates freely. If you notice the ignition switch is in a different position, turn the ignition switch to the original (○ (Off) or 🔒 (Lock)) position.

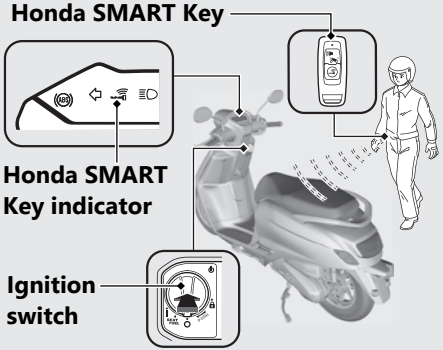

To Lock the Ignition Switch

1. Turn the ignition switch to the SEAT FUEL, ○ (Off) or 🔒 (Lock) position.
2. Lock the ignition switch by doing one of the following:
   - Leave the operating range with the Honda SMART Key. P.37
   - Push the ignition switch.
   - Wait for approximately 20 seconds after turning the ignition switch from | (On) to SEAT FUEL, ○ (Off) or 🔒 (Lock) position.
   - Switch the Honda SMART Key system to inactive. P.36
3. Make sure that the Honda SMART Key indicator goes off, the turn signals flash once, and the buzzer rings 1 time. This indicates that the ignition switch is locked.
   ▶ The buzzer sound can be cancelled. P.42

When the Honda SMART Key system does not work properly P.119

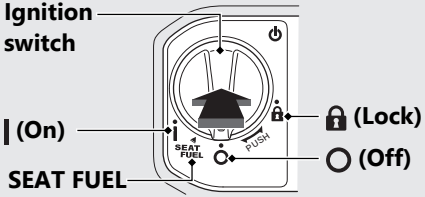



Honda SMART Key System *(Continued)*

Always make sure the ignition switch position is in the ○ (Off) or 🔒 (Lock) position when you leave your vehicle.

When the ignition switch is locked in the SEAT FUEL position, the ignition switch can be turned to the ○ (Off) position only once.

When the ignition switch is locked in the ○ (Off) position, the steering cannot be locked. To lock the steering, unlock the ignition switch.

Switch the Buzzer Sound When the Ignition Switch is Locked/Unlocked

Enable

1. Deactivate the Honda SMART Key system. P.36
2. Lightly press the ON/OFF button. The red Honda SMART Key LED comes on.
3. While the red LED is on, press the answer back/alarm button.
   ▶ The red LED starts blinking when the buzzer sound is properly enabled.

Answer back/ alarm button



Disable

①Deactivate the Honda SMART Key system.
P.36

②Lightly press the ON/OFF button. The red Honda SMART Key LED blinks.

③While the red LED is blinking, press the answer back/alarm button.

▶ The red LED stops blinking but stays on when the buzzer sound is properly disabled.

Anti-theft Alarm System

The anti-theft alarm system is a device to reduce the likelihood of theft. When the sensor detects vibration or movement with the ignition switch in the ○ (Off) or 🔒 (Lock) position and the system is set, the alarm is activated.

The buzzer rings and the turn signals blink for about 10 seconds when the anti-theft alarm system detects vibration caused by contact or movement.

The buzzer rings and the turn signals blink for about 60 seconds when the anti-theft alarm system detects a substantial change in the vehicle posture. After the buzzer rings for 60 seconds, the anti-theft alarm system will be reset in that posture.

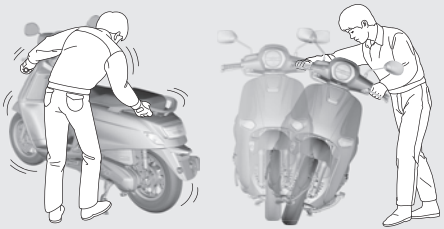



If the ignition switch is left the (Off) or (Lock) position for more than 10 days, the anti-theft alarm system will no longer operate.
When the system is active and the vehicle receives a signal from pressing the answer back/alarm button, system activation will be extended for 10 days.
To reset the system, turn the ignition switch to the (On) position once.

The anti-theft alarm system uses low-intensity radio waves. It may affect medical equipment such as a cardiac pacemaker.

When the battery in the vehicle is weak, the anti-theft alarm system may not function.

Setting the Anti-theft Alarm System

1. Turn the ignition switch to (Off) or (Lock) position.
2. Press the answer back/alarm button. Within a second, the turn signals blink and the buzzer rings 1 time. After 2.5 seconds, the buzzer rings 1 time. The anti-theft alarm system is activated.
   The alarm indicator flashes while the anti-theft alarm system is activated.

Answer back/ alarm button



Alarm indicator

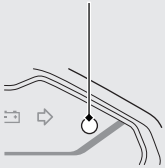

Anti-theft Alarm System *(Continued)*

Cancelling the Anti-theft Alarm System

To cancel the anti-theft alarm system, unlock the ignition switch. P.40

When the ignition switch is unlocked, the buzzer rings 2 times and the alarm indicator goes off.

▶ The buzzer sound can be cancelled. P.42

Stopping the Anti-theft Alarm Activation

To stop the anti-theft alarm activation, do one of the following:

- Press the answer back/alarm button on the Honda SMART Key.
  ▶ After stopping the anti-theft alarm activation, the anti-theft alarm system will be reset.
- Unlock the ignition switch. P.40
  ▶ After stopping the anti-theft alarm activation, the anti-theft alarm system will be cancelled.



Adjusting the Sensitivity of Anti-theft Alarm System

You can select from 3 sensitivity levels for the anti-theft alarm system.

1. Make sure that the Honda SMART Key system is active. P.36
2. Push the ignition switch to authenticate the Honda SMART Key system. P.40
3. Press and hold the ignition switch for more than 4 seconds.
   ▶ The Honda SMART Key indicator flashes.

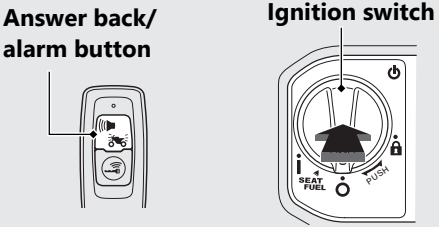

4. Push the ignition switch 1 time while the Honda SMART Key indicator is flashing.
   ▶ The Honda SMART Key indicator comes on, and a buzzer sounds.
5. Repeat the following 3 times:
   Press the answer back/alarm button on the Honda SMART Key 4 times and the ignition switch 1 time.
   ▶ When the ignition switch is pressed, the Honda SMART Key indicator goes off, and the buzzer sounds. When the Honda SMART Key indicator light again, do the next input.
   ▶ When the answer back/alarm button is pressed, the Honda SMART Key LED comes on. Make sure the LED goes off before pressing the button again.

Anti-theft Alarm System *(Continued)*

- ▶ When the answer back/alarm button or ignition switch is not pressed for 1 minute, the Honda SMART Key indicator flash 3 times, and then the buzzer sounds and the mode is cancelled. Return to ❶ and do the procedure again.
- ▶ If you press the answer back/alarm button the wrong number of times before you repeat the procedure 3 times, then repeat the procedure 3 times again.

❻ Press the answer back/alarm button to select from 3 sensitivity levels.
3 alarm rings: high sensitivity
2 alarm rings: medium sensitivity
1 alarm ring: low sensitivity
The Honda SMART Key indicator comes on while setting.

❼ Press and hold the ignition switch for more than 2 seconds. The sensitivity level is set.
- ▶ The Honda SMART Key indicator turn off, and a buzzer sounds once.
- ▶ When the answer back/alarm button is not pressed for 10 seconds, the Honda SMART Key indicator flash 3 times, and then the buzzer sounds, and the sensitivity level is set.

If the Anti-Theft Alarm System Does Not Operate Properly

If any of the following situations arise, the battery (➡P.91) in the vehicle may be discharged or there is a system problem. Remove the battery and see your dealer.

- ● The alarm does not ring.
- ● The alarm rings but fades out.
- ● The alarm system does not stop.

Answer Back System

The answer back system is a device to find the location of your vehicle and to inform you that the immobilizer function of the Honda SMART Key system is activated. When you press the answer back/alarm button on the Honda SMART Key with the ignition switch is in the O (Off) or (Lock) position and the anti-theft alarm system is set, the turn signals light, and the buzzer rings, informing you of your vehicle's location and activation of the immobilizer function.

The answer back system uses low-intensity radio waves. It may affect medical equipment such as a cardiac pacemaker.



Answer Back System *(Continued)*

Operation

Press the answer back/alarm button on the Honda SMART Key.

► The answer back system will not function when the ignition switch is in the | (On) position.

If the ignition switch is left the ○ (Off) or 🔒 (Lock) position for more than 10 days, the answer back system will no longer operate. When the system is active and the vehicle receives a signal from pressing the answer back/alarm button, system activation will be extended for 10 days.

To reset the system, turn the ignition switch to the | (On) position once.

► To unlock the ignition switch P.40

When the battery in the vehicle is weak, the answer back system may not function.

Adjusting the Answer Back Buzzer Sound Volume Level

You can select 3 buzzer sound volume levels.

1. Make sure that the Honda SMART Key system is active. P.36
2. Push the ignition switch to authenticate the Honda SMART Key system. P.40
3. Press and hold the ignition switch for more than 4 seconds.
   ► The Honda SMART Key indicator flashes.

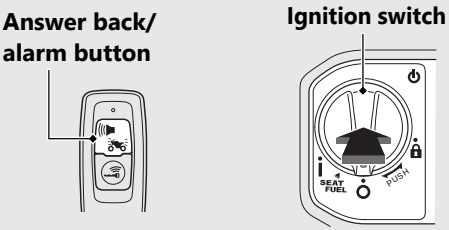

4. Push the ignition switch 1 time while the Honda SMART Key indicator is flashing.
   - ▶ The Honda SMART Key indicator comes on, and a buzzer sounds.
5. Repeat the following 3 times:
   Press the answer back/alarm button on the Honda SMART Key 2 times and the ignition switch 1 time.
   - ▶ When the ignition switch is pressed, the Honda SMART Key indicator goes off, and the buzzer sounds. When the Honda SMART Key indicator comes on again, do the next input.
   - ▶ When the answer back/alarm button is pressed, the Honda SMART Key LED comes on. Make sure the LED goes off before pressing the button again.
   - ▶ When the answer back/alarm button or ignition switch is not pressed for 1 minute, the Honda SMART Key indicator flash 3 times, and then the buzzer sounds and the mode is cancelled. Return to 1 and do the procedure again.
   - ▶ If you press the answer back/alarm button the wrong number of times before you repeat the procedure 3 times, then repeat the procedure 3 times again.
6. Press the answer back/alarm button to select from 3 levels for the sound volume. The Honda SMART Key indicator comes on while setting.

Answer Back System *(Continued)*

7. Press and hold the ignition switch for more than 2 seconds. The sound volume level is set.
   - ► The Honda SMART Key indicator turn off, and a buzzer sounds once.
   - ► When the answer back/alarm button is not pressed for 10 seconds, the Honda SMART Key indicator flash 3 times, and then the buzzer sounds, and the sound volume level is set.

Changing the Answer Back Buzzer Sound Pattern

You can select 3 buzzer sound patterns.

1. Make sure that the Honda SMART Key system is active. P.36
2. Push the ignition switch to authenticate the Honda SMART Key system. P.40
3. Press and hold the ignition switch for more than 4 seconds.
   - ► The Honda SMART Key indicator flashes.

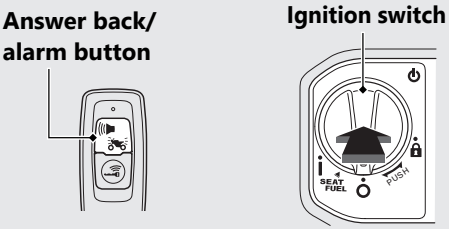

4. Push the ignition switch 1 time while the Honda SMART Key indicator is flashing.
   - ▶ The Honda SMART Key indicator comes on, and a buzzer sounds.
5. Repeat the following 3 times:
   Press the answer back/alarm button on the Honda SMART Key 3 times and the ignition switch 1 time.
   - ▶ When the ignition switch is pressed, the Honda SMART Key indicator goes off, and the buzzer sounds. When the Honda SMART Key indicator comes on again, do the next input.
   - ▶ When the answer back/alarm button is pressed, the Honda SMART Key LED comes on. Make sure the LED goes off before pressing the button again.
   - ▶ When the answer back/alarm button or ignition switch is not pressed for 1 minute, the Honda SMART Key indicator flash 3 times, and then the buzzer sounds and the mode is cancelled. Return to 1 and do the procedure again.
   - ▶ If you press the answer back/alarm button the wrong number of times before you repeat the procedure 3 times, then repeat the procedure 3 times again.
6. Press the answer back/alarm button to select from 3 buzzer sound patterns.
   The Honda SMART Key indicator comes on while setting.

Answer Back System *(Continued)*

❼ Press and hold the ignition switch for more than 2 seconds. The sound pattern is set.

- ▶ The Honda SMART Key indicator turn off, and a buzzer sounds once.
- ▶ When the answer back/alarm button is not pressed for 10 seconds, the Honda SMART Key indicator flash 3 times, and then the buzzer sounds, and the sound pattern is set.

Temporary Silence Mode

Temporary silence mode is the immediate way to turn off the answer back system buzzer sound.

Enable:

Press and hold the answer back/alarm button for about 2 seconds, the Honda SMART Key LED changes to red.

Disable:

Re-press and hold the answer back/alarm button for about 2 seconds, the Honda SMART Key LED changes to green.

Rear Brake Lock

Be sure the rear brake lock is applied while starting and warming up the engine.

Locking

Squeeze the rear brake lever and set the rear brake lock lever.

► The rear brake lock will not function if the rear brake is not adjusted properly.

P.101

ACF125CA

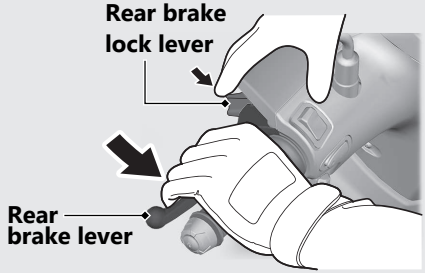

ACF125CB

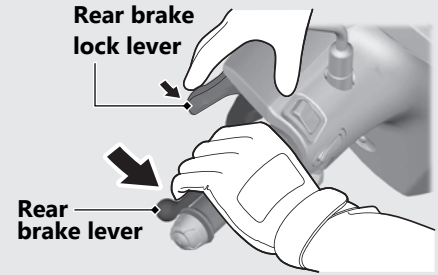

Continued

Rear Brake Lock *(Continued)*

Unlocking

Squeeze the rear brake lever.

▶ Before riding, make sure that the rear brake lock is fully released so there is no drag on the rear wheel.

ACF125CA

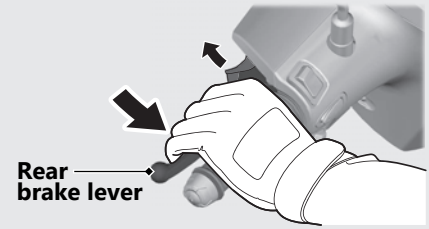

ACF125CB

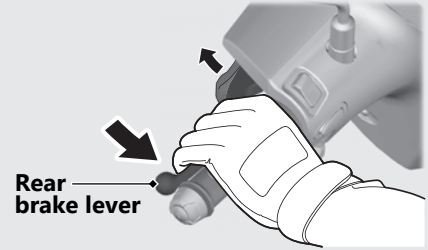

Idling Stop System

Idling Stop system is designed to help reduce the fuel consumption and noise, by idling stop while making a stop such as waiting at an intersection.

Switching the Idling Stop System On or Off

Switches the Idling Stop system on or off using the Idling Stop switch.

- ON: Ⓐ **(Idling Stop)**
  - ▶ Idling Stop indicator comes on when the Idling Stop system becomes ready to stop the engine while riding. Idling Stop indicator flashes when the engine is stopped by the Idling Stop system.
- OFF: Ⓐ OFF **(Idling)**
  - ▶ Idling Stop indicator does not come on when the Idling Stop system is off.

Activation of the Idling Stop System

The Idling Stop system becomes ready to stop the engine and Idling Stop indicator comes on when the following requirements are satisfied with the Idling Stop switch in the Ⓐ (Idling Stop) position:

- side stand is up
- start the engine by pressing the start button
- warm up the engine enough
- ride the vehicle at speeds over 10 km/h (6 mph)

Idling Stop Indicator Does Not Come On:

P.116

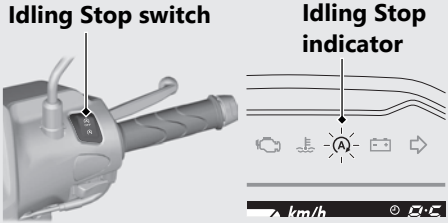

Idling Stop System *(Continued)*

Stopping the engine by the Idling Stop System

The engine stops and Idling Stop indicator changes to flash after you close the throttle completely and stop the vehicle while the Idling Stop indicator is on.

► While the engine is stopped by the Idling Stop system, if you press the Idling Stop switch to (A) OFF (Idling), the Idling Stop system will be cancelled. The engine will not restart even when you open the throttle.



Safety Precaution for the Idling Stop System

Do not go away from the vehicle while the Idling Stop indicator is flashing. When you go away from the vehicle, always turn the ignition switch to the ○ (Off) position.

► The engine may start unexpectedly if the throttle is opened.

Engine is Not Stopped by the Idling Stop System While the Idling Stop Indicator is On: P.117

NOTICE

Stopping by the Idling Stop system for a long time may cause battery discharge.

Restarting the Engine

Check that the Idling Stop indicator is flashing, and then open the throttle.

- ▶ If it is not flashing, you can't restart the engine with the Idling Stop system, even if you open the throttle.
- ▶ While the engine is stopped by the Idling Stop system, if you operate the side stand, the flashing Idling Stop indicator turns off or stops flashing and stays on, then the engine will not restart even when you open the throttle.

Engine Does Not Start Even If the Throttle is Opened: P.118

NOTICE

Headlights stay on after the engine is stopped by the Idling Stop system. The battery may discharge and you may not be able to restart engine.

When the battery is weak, switch the Idling Stop switch to (A) OFF (Idling) and do not to use the Idling Stop system. See your dealer to check the battery.

See your dealer for checking the battery as specified in the maintenance schedule.

Maintenance Schedule: P.78

Starting the Engine

Start your engine using the following procedure, regardless of whether the engine is cold or warm.

This vehicle is equipped with a side stand ignition cut-off system.

▶ If the side stand is down, the engine cannot be started.

▶ If you lower the side stand with the engine running, it will automatically shut off.

This vehicle is equipped with a Honda SMART Key system. Always keep Honda SMART Key on you when you ride the vehicle. P.37

If the engine of this vehicle is stopped while the ignition switch is in the | (On) position, authentication will be disabled after a certain amount of time or if you leave the authentication range. Restart the engine by performing step 3 - 4 under the starting procedure.

▶ If the engine of this vehicle is stopped by the Idling Stop System, authentication will not be disabled.

NOTICE

- If the engine does not start within 5 seconds, turn the ignition switch to the O (Off) position and wait 10 seconds before trying to start the engine again to recover battery voltage.
- Extended fast idling and revving the engine can damage the engine and the exhaust system.
- If the vehicle is over-turned, you must first turn the ignition switch to the O (Off) position and then inspect the vehicle carefully.

Consult your dealer for advice if you plan to ride your vehicle at an altitude above 2,500 m (8,000 feet).

NOTICE

If the vehicle is transported to a place 2,000 m (6,500 feet) higher or lower than the start point, you may not be able to achieve sufficient engine performance at the new altitude. Consult your dealer before transporting your vehicle.

1. Place the vehicle on its centre stand.
2. Turn the ignition switch to the | (On) position.
   ► To unlock the ignition switch. P.40

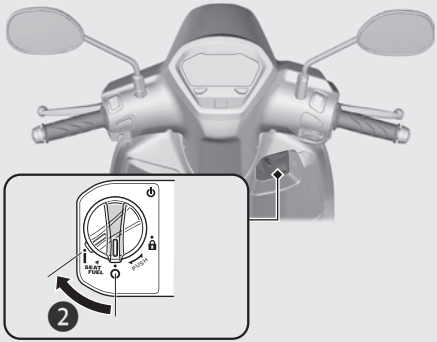

Starting the Engine *(Continued)*

3. Lock the rear wheel by squeezing the rear brake lever and setting the brake lock lever.
   ▶ The starter motor will only work when the rear brake lever is squeezed and the side stand is up.

ACF125CA

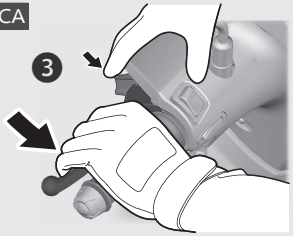

ACF125CB

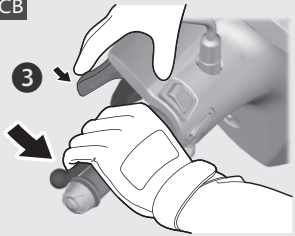

4. Press the start button with the throttle completely closed. Release the start button as soon as the engine starts.

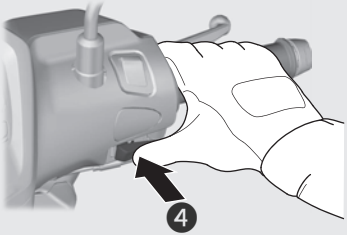

If you cannot start the engine:

① Place the vehicle on its centre stand. Lock the rear wheel by squeezing the rear brake lever and setting the brake lock lever.

② With the throttle slightly open (about 3 mm, without freeplay), press the start button.

About 3 mm, without freeplay

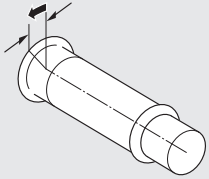

If the engine does not start:

① Open the throttle fully and press the start button for 5 seconds.

② Repeat the normal starting procedure.

③ If the engine starts, open the throttle slightly if idling is unstable.

④ If the engine does not start, wait 10 seconds before trying steps ① & ② again.

If Engine Will Not Start ➡P.110

Riding

Starting the Vehicle

❶ Push the vehicle forward off the centre stand.
- ▶ Lock the rear brake lock.
- ▶ Keep throttle closed.

Make sure the side stand and centre stand are up.

❷ Get on the vehicle.
- ▶ Mount the vehicle from the left side, keeping at least one foot on the ground.

❸ Release the rear brake lock.

❹ Acceleration and deceleration

To accelerate: Open the throttle slowly.

To decelerate: Close the throttle.

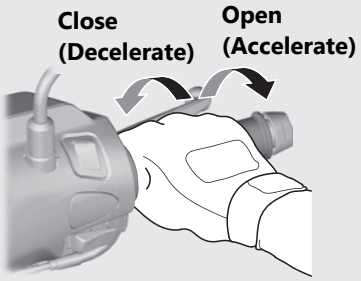

Braking

Close the throttle and apply the front and rear brake levers together.

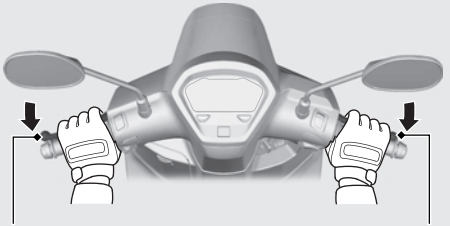

Do not apply the brake lock while riding. It may cause the wheel to lock, reducing control of the vehicle.

Refuelling

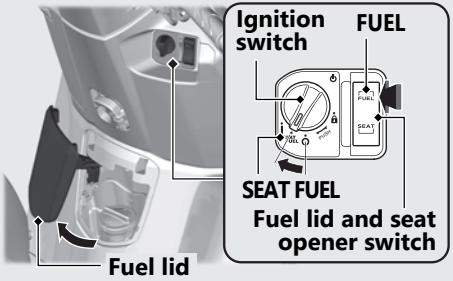

Fuel type: Unleaded petrol only
Fuel octane number: Your vehicle is designed to use Research Octane Number (RON) 91 or higher.
Tank capacity:
5.4 L (1.43 US gal, 1.19 Imp gal)

Refuelling and Fuel Guidelines P.12

Opening the Fuel Fill Cap

1. Turn the ignition switch to the SEAT FUEL position.
   ▶ To unlock the ignition switch. P.40
2. Push the FUEL side of the fuel lid and seat opener switch.
   ▶ The fuel lid opens.

❸ Turn the fuel fill cap counterclockwise and remove the fuel fill cap.

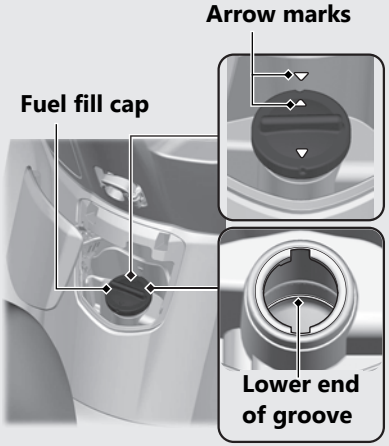

Do not fill with fuel above the lower end of the groove.

How to Refuel

To refuel with automatic stop filler nozzle:

① Insert the filler nozzle fully.

► It can be put in easily by swinging nozzle back and forth.

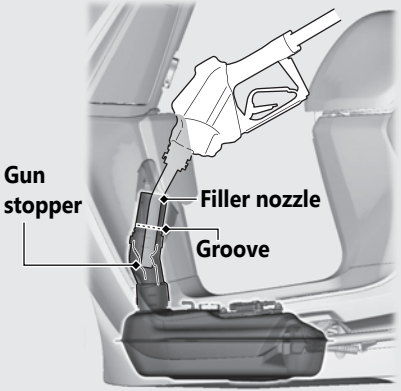

Refuelling *(Continued)*

② Refuel until it stops automatically.
- ▶ When the tank is full, the fuel nozzle will click off automatically.
- ▶ If the nozzle is not fully inserted, the automatic stop does not function, which may cause fuel to overflow from the fuel filler opening.

To refuel without automatic stop filler nozzle:

Refuel to the lower end of groove. Add fuel slowly so it does not overflow from the fuel filler opening.

⚠WARNING

Petrol is highly flammable and explosive. You can be burned or seriously injured when handling fuel.

- Stop the engine, and keep heat, sparks, and flames away.
- Only handle fuel outdoors.
- Wipe up spills immediately.

⚠CAUTION

Do not add fuel after the filler nozzle automatically stops.

The filler nozzle automatically stops to leave space in the fuel tank so that fuel does not overflow as a result of changes in air temperature.

Closing the Fuel Fill Cap

① Install and tighten the fuel fill cap firmly by turning it clockwise.
- ▶ Make sure that the arrow marks on the fuel fill cap and fuel tank are aligned.

② Close the fuel lid until it locks.
- ▶ Make sure that the fuel lid is closed securely.

USB Socket

The USB socket is located in the inner rack. Use USB devices at your own risk. In no event shall Honda be liable for any damage to your USB device when in use.

Only USB devices within the following specifications can be connected.
USB type-A connectors can be used.
Rated capacity is
10.5 W (5 V, 2.1 A).
► The USB socket is for charging only.

Do not connect USB devices that exceed the rated capacity. They may not be charged or work properly even if connected.
For information on usage or malfunction of the USB device you connect, refer to its instruction manual.

To connect your USB device

1. Open the inner rack lid. P.74
2. Open the cover to access the USB socket.

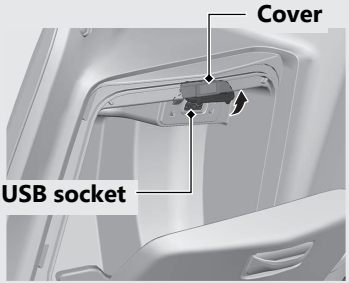

USB Socket *(Continued)*

❸ Connect a certified USB cable to the USB socket.

► To prevent the battery from becoming weak (or dead), keep the engine running while drawing current from the USB socket.

► To prevent entry of foreign matter into the USB socket, be sure to close the cover when the USB socket is not used.

► Carefully secure all connected devices, as vibration may cause damage to them or they could shift unexpectedly.

NOTICE

- Using any heat-generating USB devices or improperly rated USB devices can damage the USB socket.
- Do not use the USB socket in wet conditions, when or while washing or any other wet conditions as these will damage the USB socket.
- Do not allow the USB's harness to become pinched or trapped.

Storage Equipment

Seat

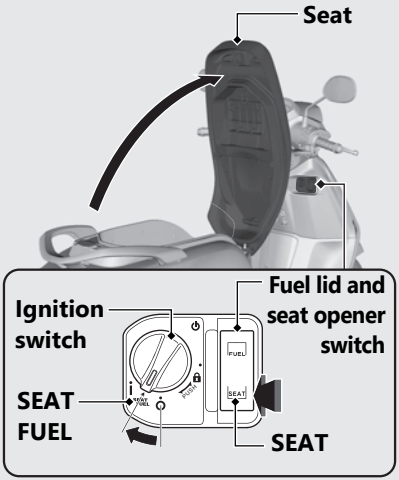

Seat Open

1. Turn the handlebar pointed straight ahead.
2. Turn the ignition switch to the SEAT FUEL position.
   ▶ To unlock the ignition switch P.40
3. Push the SEAT side of the fuel lid and seat opener switch.
4. Open the seat.

Seat Close

Close and push down on the rear of the seat until it locks. Make sure that the seat is locked securely by pulling it up lightly.
Take care not to lock your key in the compartment under the seat.

Storage Equipment *(Continued)*

Helmet Holder

The helmet holders are located under the seat.

► Use the helmet holders only when parked.

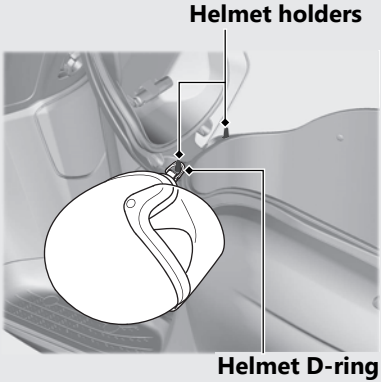

WARNING

Riding with a helmet attached to the holder can interfere with your ability to safely operate the vehicle and could lead to a crash in which you can be seriously hurt or killed.

Use the helmet holder only while parked. Do not ride with a helmet secured by the holder.

Opening the Seat P.71

A helmet can be stored in the centre compartment.
Set in the front of the helmet forward.

▶ Some helmets may not fit in the compartment due to their size or design.

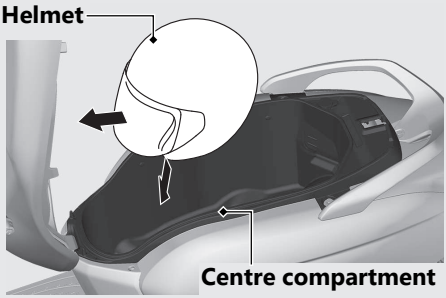

Centre compartment

Never exceed the maximum weight limit.

Maximum Weight: 10 kg (22 lb)

▶ Do not store any items that are flammable or susceptible to heat damage.

▶ Do not store valuables or fragile articles.

Document Bag / Tool

The document bag and tools are in the reverse side of the seat.

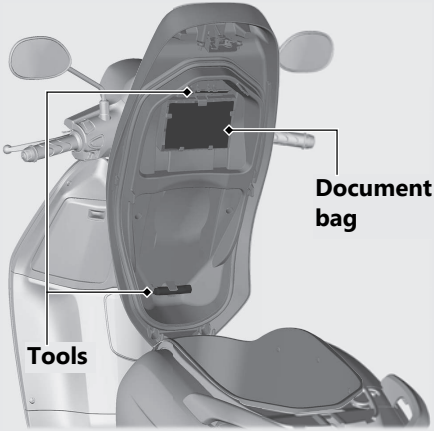

Opening the Seat P.71

Storage Equipment *(Continued)*

Inner rack

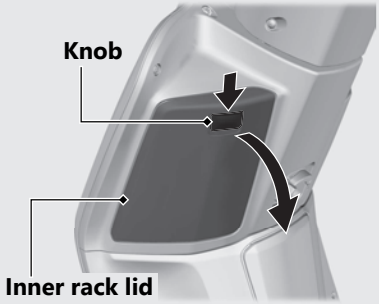

Open

Push the knob down, then open the inner rack lid.

Close

Press forward the inner rack lid until it is firmly closed.

There is a pocket inside the inner rack lid where small articles can be stored.

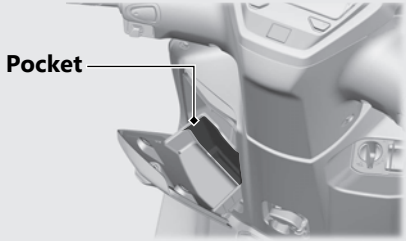

The maximum allowable load on the hook and in the inner rack shall be no more than **1.5 kg (3.3 lb)**.

Make sure that the inner rack lid is closed securely.

▶ Do not store valuables or fragile articles.

Hook

The hook is provided below the handlebar.

▶ Do not attach large luggage to the hook that would hang out from the vehicle and/or interfere with the movement of your feet.

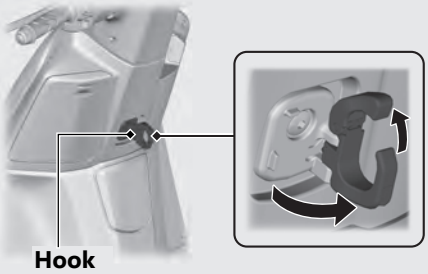

The maximum allowable load on the hook and in the inner rack shall be no more than **1.5 kg (3.3 lb)**.

Maintenance

Please read “Importance of Maintenance” and “Maintenance Fundamentals” carefully before attempting any maintenance. Refer to “Specifications” for service data.

Importance of Maintenance ..... P. 77
Maintenance Schedule ..... P. 78
Maintenance Fundamentals ..... P. 81
Tools ..... P. 90
Removing & Installing Body Components .. P. 91
- Battery ..... P. 91
- Clip ..... P. 92
- Front Centre Cover ..... P. 93

Engine Oil ..... P. 94
Coolant ..... P. 96
Brakes ..... P. 98
Side Stand ..... P. 104
Throttle ..... P. 105
Other Replacement ..... P. 106
- Replacing the Honda SMART Key Battery .. P. 106

Importance of Maintenance

Keeping your vehicle well-maintained is absolutely essential to your safety and to protect your investment, obtain maximum performance, avoid breakdowns, and reduce air pollution. Maintenance is the owner's responsibility. Be sure to inspect your vehicle before each ride and perform the periodic checks specified in the Maintenance Schedule.
➔P. 78

⚠WARNING

Improperly maintaining your vehicle or failing to correct a problem before you ride can cause a crash in which you can be seriously hurt or killed.

Always follow the inspection and maintenance recommendations and schedules in this owner's manual.

Maintenance Safety

Always read the maintenance instructions before you begin each task and make sure that you have the tools, parts, and skills required. We cannot warn you of every conceivable hazard that can arise in performing maintenance. Only you can decide whether or not you should perform a given task.

Follow these guidelines when performing maintenance.

- Stop the engine and turn the ignition switch to the ○ (Off) position.
- Place your vehicle on a firm, level surface using the side stand, centre stand or a maintenance stand to provide support.
- Allow the engine, muffler, brakes, and other high-temperature parts to cool before servicing as you can get burned.
- Run the engine only when instructed, and do so in a well-ventilated area.

Maintenance Schedule

The maintenance schedule specifies the maintenance requirements necessary to ensure safe, dependable performance, and proper emission control.

Maintenance work should be performed in accordance with Honda's standards and specifications by properly trained and equipped technicians. Your dealer meets all of these requirements. Keep an accurate record of maintenance to help ensure that your vehicle is properly maintained.
Make sure that whomever performs the maintenance completes this record.

All scheduled maintenance is considered a normal owner operating cost and will be charged to you by your dealer. Retain all receipts. If you sell the vehicle, these receipts should be transferred with the vehicle to the new owner.

Honda recommends that your dealer should road test your vehicle after each periodic maintenance is carried out.

Items		Pre-ride Check P. 81	Frequency *1								Annual Check	Regular Replace	Refer to page
			× 1,000 km	1	6	12	18	24	30	36			
			× 1,000 mi	0.6	4	8	12	16	20	24			
Honda Diagnostic System				I	I	I	I	I	I	I			–
Fuel Line					I	I	I	I	I	I	I		–
Fuel Level		I											66
Throttle Operation		I			I	I	I	I	I	I	I		105
Air Cleaner *2							R			R			–
Crankcase Breather *3					C	C	C	C	C	C			–
Spark Plug					I	R	I	R	I	R			–
Valve Clearance					I	I	I	I	I	I			–
Engine Oil		I		R	R	R	R	R	R	R	R		–
Engine Oil Strainer Screen						C		C		C			–
Engine Idle Speed				I	I	I	I	I	I	I	I		–
Radiator Coolant *4		I				I		I		I	I	3 Years	96
Cooling System						I		I		I	I		–
Drive Belt						I		R		I			–
Final Drive Oil *4												2 Years	–

Maintenance Level

: Intermediate. We recommend service by your dealer, unless you have the necessary tools and are mechanically skilled.
Procedures are provided in an official Honda Shop Manual.

: Technical. In the interest of safety, have your vehicle serviced by your dealer.

Maintenance Legend

I : Inspect (clean, adjust, lubricate, or replace, if necessary)
R : Replace
C : Clean

Continued

Items		Pre-ride Check ➡ P. 81	Frequency *1								Annual Check	Regular Replace	Refer to page
			× 1,000 km	1	6	12	18	24	30	36			
			× 1,000 mi	0.6	4	8	12	16	20	24			
Battery					I	I	I	I	I	I	I		91
Brake Fluid *4		I			I	I	I	I	I	I	I	2 Years	98
Brake Pads/Shoes Wear		I			I	I	I	I	I	I	I		99, 103
Brake System		I		I	I	I	I	I	I	I	I		81
Brake Lock Operation					I	I	I	I	I	I			55
Headlight Aim					I	I	I	I	I	I	I		–
Lights/Horn		I											–
Clutch Shoes Wear						I		I		I			–
Side Stand		I			I	I	I	I	I	I	I		104
Suspension					I	I	I	I	I	I	I		–
Nuts, Bolts, Fasteners				I		I		I		I	I		–
Wheels/Tyres		I			I	I	I	I	I	I	I		87
Steering Head Bearings						I		I		I	I		–

Notes:
*1 : At higher odometer reading, repeat at the frequency interval established here.
*2 : Service more frequently when riding in unusually wet or dusty areas.
*3 : Service more frequently when riding in rain or at full throttle.
*4 : Replacement requires mechanical skill.

Pre-ride Inspection

To ensure safety, it is your responsibility to perform a pre-ride inspection and make sure that any problem you find is corrected. A pre-ride inspection is a must, not only for safety, but because having a breakdown, or even a flat tyre, can be a major inconvenience.

Check the following items before you get on your vehicle:

- Fuel level - Fill fuel tank when necessary ➔P. 66
- Throttle - Check for smooth opening and full closing in all steering positions ➔P. 105
- Engine oil level - Add engine oil if necessary. Check for leaks ➔P. 94
- Coolant level - Add coolant if required. Check for leaks ➔P. 96
- Brakes - Check operation;
  Front: check brake fluid level and pads wear ➔P. 98, ➔P. 99
  Rear: check shoes wear and freeplay, adjust if necessary ➔P. 103, ➔P. 100
- Lights and horn - Check that lights, indicators and horn function properly
- Side stand ignition cut-off system - Check for proper function ➔P. 104
- Wheels and tyres - Check condition, air pressure and adjust if necessary ➔P. 87

Replacing Parts

Always use Honda Genuine Parts or their equivalents to ensure reliability and safety.

⚠WARNING

Installing non-Honda parts may make your vehicle unsafe and cause a crash in which you can be seriously hurt or killed.

Always use Honda Genuine Parts or equivalents that have been designed and approved for your vehicle.

Battery

Your vehicle has a maintenance-free type battery. You do not have to check the battery electrolyte level or add distilled water. Clean the battery terminals if they become dirty or corroded.

Do not remove the battery cap seals. There is no need to remove the cap when charging.

NOTICE

Your battery is a maintenance-free type and can be permanently damaged if the cap strip is removed.



This symbol on the battery means that this product must not be treated as household waste.

NOTICE

An improperly disposed of battery can be harmful to the environment and human health. Always confirm local regulations for proper battery disposal instruction.

What to do in an emergency

If any of the following occur, immediately see your doctor.

- Electrolyte splashes into your eyes:
  - ▶ Wash your eyes repeatedly with cool water for at least 15 minutes. Using water under pressure can damage your eyes.
- Electrolyte splashes onto your skin:
  - ▶ Remove affected clothing and wash your skin thoroughly using water.
- Electrolyte splashes into your mouth:
  - ▶ Rinse mouth thoroughly with water, and do not swallow.

⚠WARNING

The battery gives off explosive hydrogen gas during normal operation.

A spark or flame can cause the battery to explode with enough force to kill or seriously hurt you.

Wear protective clothing and a face shield, or have a skilled mechanic do the battery servicing.

Cleaning the Battery Terminals

1. Remove the battery. ➔P. 91
2. If the terminals are starting to corrode and are coated with a white substance, wash with warm water and wipe clean.

3. If the terminals are heavily corroded, clean and polish the terminals with a wire brush or sandpaper. Wear safety glasses.

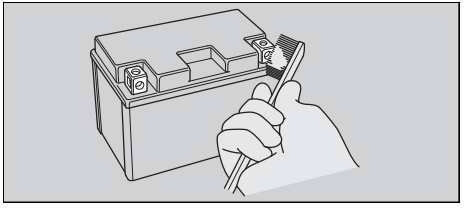

4. After cleaning, reinstall the battery.

The battery has a limited life span. Consult your dealer about when you should replace the battery. Always replace the battery with another maintenance-free battery of the same type.

NOTICE
Installing non-Honda electrical accessories can overload the electrical system, discharging the battery and possibly damaging the system.

Fuses

Fuses protect the electrical circuits on your vehicle. If something electrical on your vehicle stops working, check for and replace any blown fuses. P. 130

Inspecting and Replacing Fuses

Turn the ignition switch to the ○ (Off) position to remove and inspect fuses. If a fuse is blown, replace with a fuse of the same rating. For fuse ratings, see "Specifications." P. 148

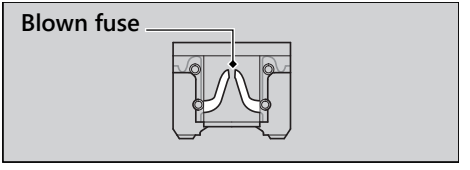

NOTICE
Replacing a fuse with one that has a higher rating greatly increases the chance of damage to the electrical system.

If a fuse fails repeatedly, you likely have an electrical fault. Have your vehicle inspected by your dealer.

Engine Oil

Engine oil consumption varies and oil quality deteriorates according to riding conditions and time elapsed.
Check the engine oil level regularly, and add the recommended engine oil if necessary. Dirty oil or old oil should be changed as soon as possible.

Selecting the Engine Oil

For recommended engine oil, see "Specifications." P. 147
If you use non-Honda engine oil, check the label to make sure that the oil satisfies all of the following standards:

- JASO T 903 standard*1: MB
- SAE standard*2: 10W-30
- API classification*3: SJ or higher

*1. The JASO T 903 standard is an index for engine oils for 4-stroke motorcycle engines. There are two classes: MA and MB. For example, the following label shows the MB classification.

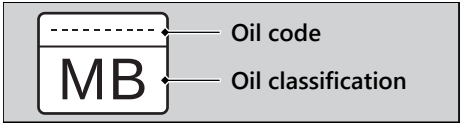

*2. The SAE standard grades oils by their viscosity.

*3. The API classification specifies the quality and performance rating of engine oils. Use SJ or higher oils, excluding oils marked as "Energy Conserving" or "Resource Conserving" on the circular API service symbol.

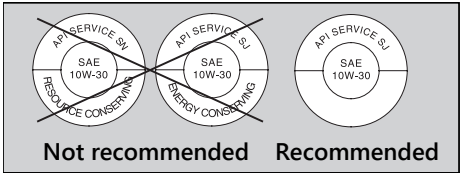

Brake Fluid

Do not add or replace brake fluid, except in an emergency. Use only fresh brake fluid from a sealed container. If you do add fluid, have the brake system serviced by your dealer as soon as possible.

NOTICE
Brake fluid can damage plastic and painted surfaces.
Wipe up spills immediately and wash thoroughly.

Recommended brake fluid:
Honda DOT 3 or DOT 4 Brake Fluid or equivalent

Recommended Coolant

Use only genuine HONDA PRE-MIX COOLANT without diluting with water. Genuine HONDA PRE-MIX COOLANT is excellent at preventing corrosion and overheating.
The coolant should be inspected and replaced properly by following the maintenance schedule. P. 78

NOTICE
Using coolant not specified for aluminium engines or tap/mineral water can cause corrosion.

Crankcase Breather

Service more frequently when riding in rain, at full throttle, or after the vehicle is washed or overturned. Service if the deposit level can be seen in the transparent section of the drain tube.

If the drain tube overflows, the air filter may become contaminated with engine oil, causing poor engine performance.

Tyres (Inspecting/Replacing)

Checking the Air Pressure

Visually inspect your tyres and use an air pressure gauge to measure the air pressure at least once a month or any time you think the tyres look low. Always check air pressure when your tyres are cold.

Inspecting for Damage

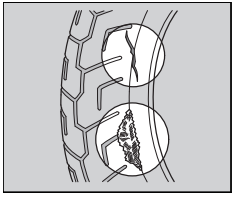

Inspect the tyres for cuts, slits, or cracks that expose fabric or cords, or nails or other foreign objects embedded in the side of the tyre or the tread. Also inspect for any unusual bumps or bulges in the side walls of the tyres.

Inspecting for Abnormal Wear

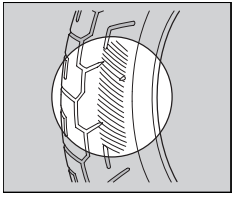

Inspect the tyres for signs of abnormal wear on the contact surface.

Continued

Inspecting Tread Depth

Inspect the tread wear indicators. If they become visible, replace the tyres immediately.

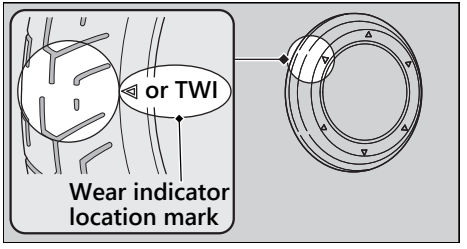

⚠WARNING

Riding on tyres that are excessively worn or improperly inflated can cause a crash in which you can be seriously hurt or killed.

Follow all instructions in this owner's manual regarding tyre inflation and maintenance.

Have your tyres replaced by your dealer.
For recommended tyres and air pressure, see "Specifications." P. 147
Follow these guidelines whenever you replace tyres:

- Use the recommended tyres or their equivalents of the same size, construction, speed rating, and load range.
- Do not install a tube inside a tubeless tyre on this vehicle. Excessive heat build-up can cause the tube to burst.
- Use only tubeless tyres on this vehicle. The rims are designed for tubeless tyres, and during hard acceleration or braking, a tube-type tyre could slip on the rim and cause the tyre to rapidly deflate.

⚠WARNING

Installing improper tyres on your vehicle can adversely affect handling and stability, and can cause a crash in which you can be seriously hurt or killed.

Always use the size and type of tyres recommended in this owner's manual.

Tools

The tools are stored in the reverse side of the seat. P. 71

You can perform some roadside repairs, minor adjustments and parts replacement with the provided tools.

- Spark plug wrench
- Standard/Phillips screwdriver

When using the screwdriver, use the spark plug wrench as a screwdriver handle.

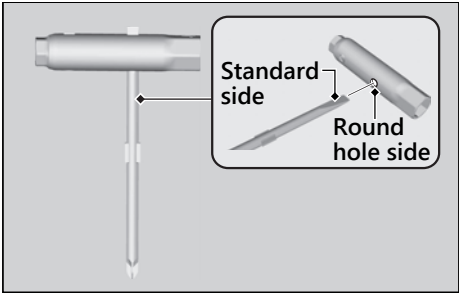

Battery

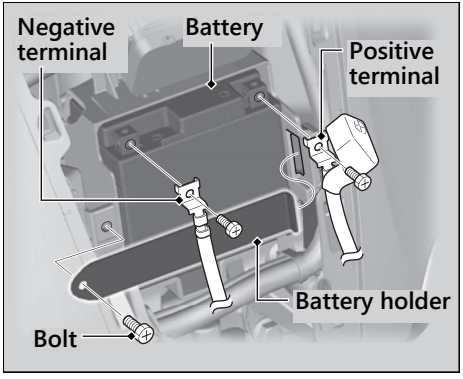

Removal

Make sure the ignition switch is in the ○ (Off) position.

1. Remove the front centre cover. P. 93
2. Disconnect the negative ⊖ terminal from the battery.
3. Disconnect the positive ⊕ terminal from the battery.
4. Remove the battery holder by removing the bolt.
5. Remove the battery, taking care not to drop the terminal nuts.

Continued

Installation

Install the parts in the reverse order of removal. Always connect the positive ⊕ terminal first. Make sure bolts and nuts are tight.
Make sure the clock information is correct after the battery is reconnected. ➡P. 26

The anti-theft alarm system will be deactivated if the battery is disconnected. The system will remain off when the battery is reconnected.
To activate the system, see "Setting the Anti-theft Alarm System." ➡P. 45

For proper handling of the battery, see
"Maintenance Fundamentals." ➡P. 82
"Battery Goes Dead." ➡P. 127

Clip

Removal



1. Press down on the centre pin to release the lock.
2. Pull the clip out of the hole.

Installation



1. Push the bottom of the centre pin.
2. Insert the clip into the hole.
3. Press down on the centre pin to lock the clip.

Front Centre Cover

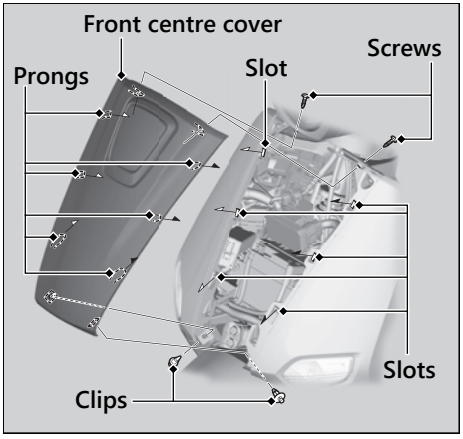

Removal

1. Remove the screws.
   ▶ To use the screwdriver. P. 90
2. Remove the clips. P. 92
3. Remove the front centre cover by releasing the prongs from their slot.

Installation

Install the parts in the reverse order of removal.
Make sure that all prongs are installed securely in position.

Checking the Engine Oil

Check the engine oil with the Idling Stop switch at Ⓐ OFF (Idling).

1. If the engine is cold, idle the engine for 3 to 5 minutes.
2. Turn the ignition switch to the ○ (Off) position and wait for 2 to 3 minutes.
3. Place your vehicle on its centre stand on a firm, level surface.
4. Remove the oil fill cap/dipstick and wipe it clean.
5. Insert the oil fill cap/dipstick until it seats, but don't screw it in.
6. Check that the oil level is between the upper level and lower level marks on the oil fill cap/dipstick.
7. Securely install the oil fill cap/dipstick.

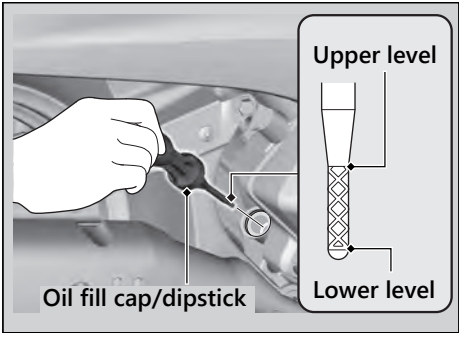

Adding Engine Oil

If the engine oil is below or near the lower level mark, add the recommended engine oil.
➡P. 85, ➡P. 147

1. Remove the oil fill cap/dipstick. Add the recommended oil until it reaches the upper level mark.
   - ▶ Place your vehicle on its centre stand on a firm, level surface when checking the oil level.
   - ▶ Do not overfill above the upper level mark.
   - ▶ Make sure no foreign objects enter the oil filler opening.
   - ▶ Wipe up any spills immediately.
2. Securely reinstall the oil fill cap/dipstick.

NOTICE
Overfilling with oil or operating with insufficient oil can cause damage to your engine. Do not mix different brands and grades of oil.

For the recommended oil and oil selection guidelines, see "Maintenance Fundamentals."
➡P. 85

Checking the Coolant

Check the coolant level in the reserve tank while the engine is cold.

1. Place your vehicle on its centre stand on a firm, level surface.
2. Open the seat. P. 71
3. Check that the coolant level is between the UPPER level and LOWER level marks on the reserve tank.

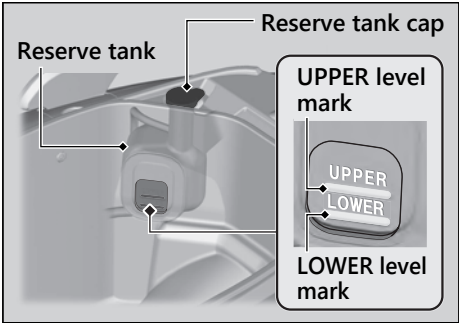

If the coolant level is dropping noticeably or the reserve tank is empty, you likely have a serious leak. Have your vehicle inspected by your dealer.

Adding Coolant

If the coolant level is below the LOWER level mark, add the recommended coolant (P. 86) until the level reaches the UPPER level mark.

Add fluid only from the reserve tank cap and do not remove the radiator cap.

1. Remove the reserve tank cap and add fluid while monitoring the coolant level.
   - ▶ Do not overfill above the UPPER level mark.
   - ▶ Make sure no foreign objects enter the reserve tank opening.
2. Securely reinstall the reserve tank cap.
3. Close the seat.

⚠WARNING

Removing the radiator cap while the engine is hot can cause the coolant to spray out, potentially scalding you.

Always let the engine and radiator cool down before removing the radiator cap.

Checking the Front Brake Fluid

1. Place your vehicle in an upright position on a firm, level surface.
2. Check that the brake fluid reservoir is horizontal and that the fluid level is above the LWR mark.

If the brake fluid level in the reservoir is below the LWR mark or the brake lever freeplay becomes excessive, inspect the brake pads for wear.
If the brake pads are not worn, you most likely have a leak. Have your vehicle inspected by your dealer.

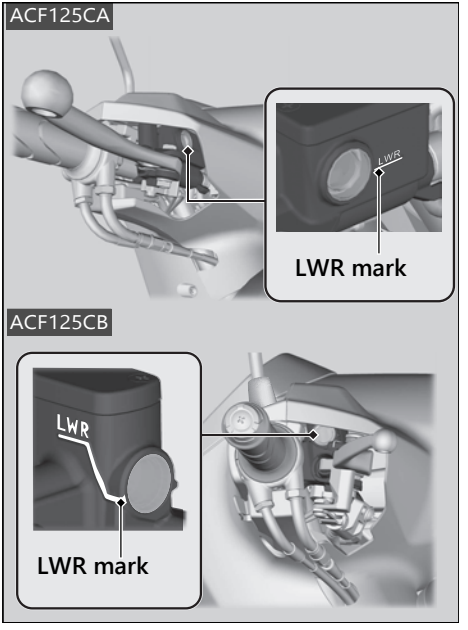

Inspecting the Front Brake Pads

Check the condition of the brake pad wear indicators.
The pads need to be replaced if a brake pad is worn to the indicator.

Inspect the brake pads from below the brake caliper.

If necessary, have the pads replaced by your dealer.
Always replace both left and right brake pads at the same time.

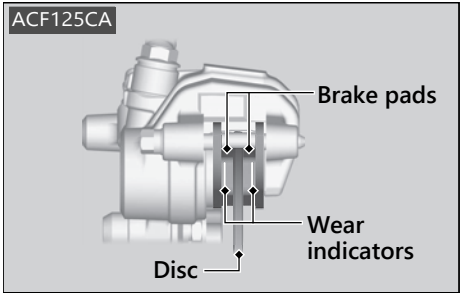

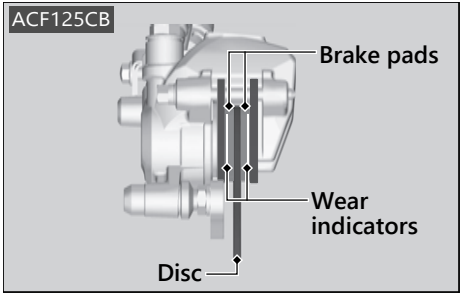

Inspecting the Rear Brake Lever Freeplay

1. Place the vehicle on its centre stand.
2. Measure the distance the rear brake lever moves before the brake takes hold.

Freeplay at the tip of the brake lever:
10 - 20 mm (0.4 - 0.8 in)

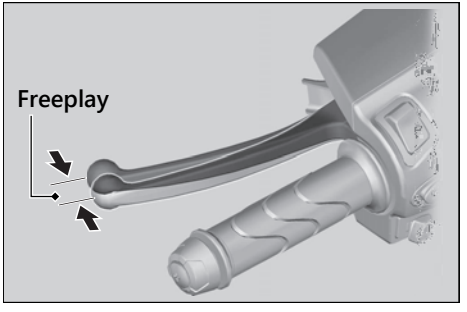

Check the brake cable for kinks or signs of wear. If necessary, have it replaced by your dealer.
Lubricate the brake cable with a commercially available cable lubricant to prevent premature wear and corrosion.
Make sure the brake arm, spring and fastener are in good condition.

Adjusting the Rear Brake Lever Freeplay

Adjust the freeplay of the brake lever with the front wheel pointed straight ahead.
Make sure the cut-out on the adjusting nut is seated on the brake arm pin when adjusting the freeplay.

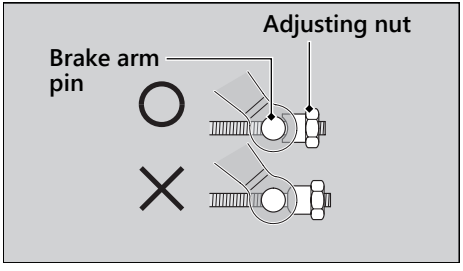

If proper adjustment cannot be obtained by this method, see your dealer.

1. Adjust by turning the rear brake adjusting nut a half-turn at a time.

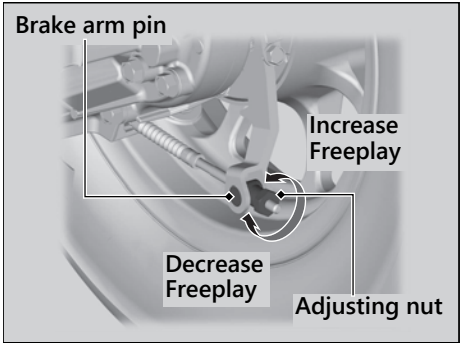

2. Apply the brake several times and check for free wheel rotation after the brake lever is released.

3. Push the brake arm to confirm that there is a gap between the rear brake adjusting nut and brake arm pin.

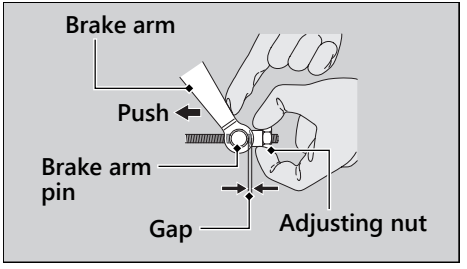

After adjustment, confirm the freeplay of the brake lever.
Make sure the brake arm, spring and fastener are in good condition.

NOTICE
Do not turn the adjuster beyond its natural limits.

Inspecting the Rear Brake Shoe Wear

The rear brake is equipped with a brake wear indicator.

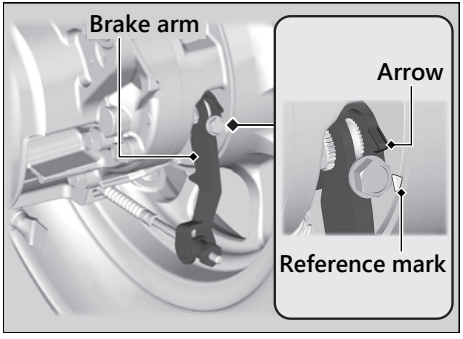

When the brake is applied, an arrow attached to the brake arm moves toward a reference mark on the brake panel. If the arrow aligns with the reference mark on full application of the brake, the brake shoes must be replaced. See your dealer for this service.

When brake service is necessary, see your dealer. Use only Honda Genuine Parts or their equivalent.

Checking the Side Stand

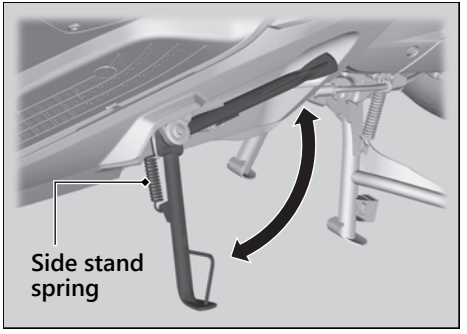

1. Place your vehicle on its centre stand on a firm, level surface.
2. Check that the side stand operates smoothly. If the side stand is stiff or squeaky, clean the pivot area and lubricate the pivot bolt with clean grease.
3. Check the spring for damage or loss of tension.
4. Sit on the vehicle and raise the side stand.
5. Start the engine.
6. Lower the side stand all the way. The engine should stop as you lower the side stand. If the engine doesn't stop, have your vehicle inspected by your dealer.

Checking the Throttle

With the engine off, check that the throttle rotates smoothly from fully closed to fully open in all steering positions and throttle freeplay is correct. If the throttle does not move smoothly or close automatically, or if the cable is damaged, have the vehicle inspected by your dealer.

Freeplay at the throttle grip flange:
2 - 6 mm (0.1 - 0.2 in)

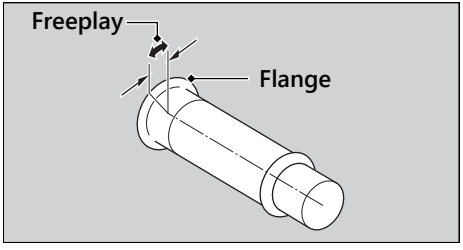

Replacing the Honda SMART Key Battery

If the Honda SMART Key indicator flashes 5 times when the ignition switch is turned to the ▌(On) position, or the operating range becomes unstable, replace the battery as soon as possible.

We recommend to see your dealer for this service.

Battery type: CR2032/CR2032H

1. Remove the upper case by inserting a coin or a flat head screwdriver covered with a protective cloth into the slit.
   - ▶ Wrap a coin or a screwdriver with a protective cloth to prevent scratching the Honda SMART Key.
   - ▶ Do not touch the circuit or terminal. This may cause problems.
   - ▶ Be careful to avoid scratching the waterproof covering or allowing dust to enter.
   - ▶ Do not forcibly dismantle the Honda SMART Key body.

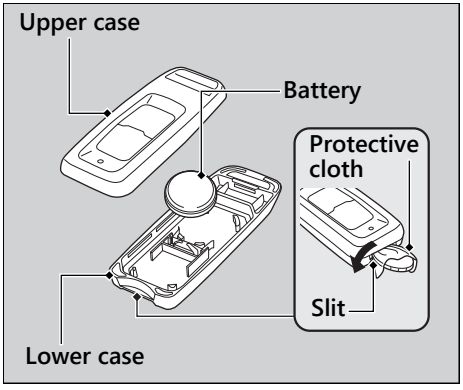

2. Replace the old battery with a new battery with the negative ⊖ side facing up.

3. Snap the two halves of the Honda SMART Key back together.
▶ Make sure that upper and lower cases are set in the right position.

⚠WARNING

CHEMICAL BURN HAZARD

The battery that powers the Honda SMART Key can cause severe internal burns and can even lead to death if swallowed.

Keep new and used batteries away from children.

If you suspect that a child has swallowed the battery, seek medical attention immediately.

CAUTION

- Danger of explosion if battery is incorrectly replaced. Replace only with the same or equivalent type.
- Do not expose to excessive heat such as sunshine, fire or the like, that can result in an explosion or the leakage of flammable liquid or gas during use, storage or transportation.
- Do not dispose of a battery into fire or a hot oven, or give mechanically crushing or cutting of a battery, that can result in an explosion.
- Do not subject to extremely low air pressure at high altitude that may result in an explosion or the leakage of flammable liquid or gas.

Troubleshooting

Engine Will Not Start ..... P. 110
Overheating (High coolant temperature indicator is on) ..... P. 111
Warning Indicators On or Flashing ..... P. 112
PGM-FI (Programmed Fuel Injection) Malfunction Indicator Lamp (MIL) ..... P. 112
Battery Charging Condition indicator ..... P. 112
ABS (Anti-lock Brake System) Indicator ..... P. 113
Honda SMART Key Indicator ..... P. 114
Other Warning Indications ..... P. 115
Fuel Gauge Failure Indication ..... P. 115
When the Idling Stop System Does Not Operate Properly ..... P. 116
Idling Stop Indicator Does Not Come On ..... P. 116
Engine is Not Stopped by the Idling Stop System While the Idling Stop Indicator is On ..... P. 117
Engine Does Not Start Even If the Throttle is Opened ..... P. 118
When the Honda SMART Key System Does Not Operate Properly ..... P. 119
Unlock the Seat in an Emergency ..... P. 121
Unlock the Ignition Switch in an Emergency ..... P. 123
Tyre Puncture ..... P. 126
Electrical Trouble ..... P. 127
Battery Goes Dead ..... P. 127
Burned-out Light Bulb ..... P. 127
Blown Fuse ..... P. 130
Unstable Engine Operation Occurs Intermittently ..... P. 131

Starter Motor Operates But Engine Does Not Start

Check the following items:

- Check the correct engine starting sequence. ➡P. 60
- Check that there is petrol in the fuel tank.
- Check if the PGM-FI malfunction indicator lamp (MIL) is on.
  ▶ If the indicator lamp is on, contact your dealer as soon as possible.

Starter Motor Does Not Operate

Check the following items:

- Check the correct engine starting sequence. ➡P. 60
- Check for a blown fuse. ➡P. 130
- Check for a loose battery connection (➡P. 91) or battery terminal corrosion (➡P. 83).
- Check the condition of the battery. ➡P. 127

If the problem continues, have your vehicle inspected by your dealer.

Overheating (High coolant temperature indicator is on)

The engine is overheating when the following occurs:

- High coolant temperature indicator comes on.
- Acceleration becomes sluggish.

If this occurs, pull safely to the side of the road and perform the following procedure. Extended fast idling may cause the high coolant temperature indicator to come on.

NOTICE

Continuing to ride with an overheated engine can cause serious damage to the engine.

1. Stop the engine using the ignition switch.
2. Allow the engine to cool with the ignition switch in the ○ (Off) position.
3. After the engine has cooled, inspect the radiator hose and check if there is a leak. P. 96

   If there is a leak:

   Do not start the engine. Transport your vehicle to your dealer.
4. Check the coolant level in the reserve tank. P. 96

   ▶ Add coolant as necessary.
5. If 1-4 check normal, you may continue riding, but closely monitor the high coolant temperature indicator.

PGM-FI (Programmed Fuel Injection) Malfunction Indicator Lamp (MIL)

If the indicator comes on while riding, you may have a serious problem with the PGM-FI system. Reduce speed and have your vehicle inspected by your dealer as soon as possible.

Battery Charging Condition indicator

If the indicator comes on while riding, you may have a condition of low battery voltage or battery performance degradation. Have your vehicle inspected by your dealer.

▶ If the battery does not have enough voltage to drive the indicator system, the indicator may not come on.

ABS (Anti-lock Brake System) Indicator

ACF125CA

If the indicator operates in one of the following ways, you may have a serious problem with the ABS. Reduce your speed and have your vehicle inspected by your dealer as soon as possible.

- Indicator comes on or starts flashing while riding.
- Indicator does not come on when the ignition switch is turned to the | (On) position.
- Indicator does not go off at speeds above 10 km/h (6 mph).

If the ABS indicator stays on, your brakes will continue to work as a conventional system, but without the anti-locking function.

The ABS indicator may flash if you turn the rear wheel while the rear wheel is lifted off the ground. In this case, turn the ignition switch to the ○ (Off) position, and then to the | (On) position again. The ABS indicator will go off after your speed reaches 30 km/h (19 mph).

Honda SMART Key Indicator

When the Honda SMART Key indicator flashes 5 times

Replacing the Honda SMART Key Battery P. 106

When the Honda SMART Key indicator is flashing while the ignition switch is in the | (On) position

The Honda SMART Key indicator flashes when communication between your vehicle and Honda SMART Key stops after turning the ignition switch to the | (On) position.
It is probably caused by the following:

- Strong radio waves or noise are affecting the system
- You lose the Honda SMART Key while riding

However, this does not affect the operation of your vehicle until stop the engine except the idling stop.
If you turn the ignition switch to the SEAT FUEL, ○ (Off) or 🔒 (Lock) position while the Honda SMART Key indicator is flashing, the Honda SMART Key indicator will flash faster, the buzzer will ring for about 20 seconds, automatically go off, and then the ignition switch will lock.
The buzzer also rings at this time.

▶ Turn signals blink at the beginning and end of this function.

To stop this flashing and ringing, press and hold the ignition switch for more than 2 seconds. After the flashing and ringing stop, the ignition switch is locked.

If you do not have the Honda SMART Key, the ignition switch can be unlocked in another way. P. 123

Fuel Gauge Failure Indication

If the fuel system has an error, the fuel gauge indicators will be displayed as shown in the illustrations.
If this occurs, see your dealer as soon as possible.

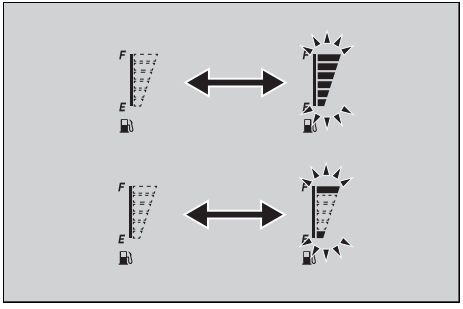

Idling Stop Indicator Does Not Come On

When the Idling Stop indicator does not come on, perform the followings.

If the Idling Stop switch is at (Idling):

Press the Idling Stop switch to (Idling Stop).

If the engine is cold:

Warm up the engine.

The Idling Stop system does not operate when the engine is cold.

If you did not ride the vehicle after engine starts:

Ride the vehicle at speeds of over 10 km/h (6 mph). The Idling Stop system does not operate until you ride once.

If PGM-FI malfunction indicator lamp (MIL) lights:

When the PGM-FI malfunction indicator lamp (MIL) lights, the Idling Stop system does not operate for protection of the engine. See your dealer.

If the battery voltage is low:

Ride the vehicle awhile, then stop the engine and then restart the engine with start button referring to the starting procedure (P. 60) for standard engine starting. The Idling Stop system may not operate if the battery voltage is low.

If this occurs frequently, contact your dealer.

Engine is Not Stopped by the Idling Stop System While the Idling Stop Indicator is On

When the engine is not stopped by the Idling Stop system while the Idling Stop indicator is on, perform the followings.

If the vehicle does not stop completely:

Stop the vehicle completely. The Idling Stop system operates if the speed is only at 0 km/h (0 mph).

If the throttle is not closed completely:

Close the throttle completely.

Engine Does Not Start Even If the Throttle is Opened

Engine does not start even if the throttle is opened, perform the followings.

If the side stand is down:

While the engine is stopped by the Idling Stop system, if you operate the side stand, the flashing Idling Stop indicator turns off or stops flashing and stays on, and the Idling Stop system is cancelled. Restart the engine with start button referring to the starting procedure (P. 60) for standard engine starting.

If the Idling Stop switch is at (Idling):

While the engine is stopping by the Idling Stop system, if you press the Idling Stop switch to (Idling), the Idling Stop system will be cancelled. Restart the engine with start button referring to the starting procedure (P. 60) for standard engine starting.

If the Idling Stop indicator flashes (the Idling Stop switch is at (Idling Stop) position), but engine does not start even if the throttle is opened, perform the followings.

Low (or dead) battery or battery lead is loose:

Check the battery and battery terminals. If the battery is weak, contact your dealer.

When the Honda SMART Key System Does Not Operate Properly

When the Honda SMART Key system does not work properly, perform the following.

- Check that the Honda SMART Key system is activated.
  Lightly press the ON/OFF button on the Honda SMART Key.
  If the Honda SMART Key LED is red, activate the Honda SMART Key system. ➔P. 36
  If the Honda SMART Key LED does not respond, replace the battery. ➔P. 106
- Check that there is no communication failure in the Honda SMART Key system. The Honda SMART Key system uses low-intensity radio waves. The Honda SMART Key system may not work properly in the following conditions:
  - ▶ When there are facilities nearby that generate strong radio waves or noise such as TV towers, power stations, radio stations, or airports.
  - ▶ When you carry the Honda SMART Key with a laptop or wireless communication device such as a radio or mobile phone.
  - ▶ When the Honda SMART Key comes into contact with or is covered by metal objects.

- Check that a registered Honda SMART Key is used.
  Use a registered Honda SMART Key. The Honda SMART Key system cannot be activated without a registered Honda SMART Key.

- Make sure that you do not use a broken Honda SMART Key.
  If you use a broken Honda SMART Key, the Honda SMART Key system cannot be activated. Bring the emergency key and ID tag to your dealer.

- Check the battery condition and battery lead in your vehicle.
  Check the battery and battery terminals. If the battery is weak, contact your dealer.

If the Honda SMART Key system cannot be activated due to other causes, contact your dealer.

Unlock the Seat in an Emergency

The seat lock can be unlocked by using the emergency key.

Open

1. Pull out the front lid backward while pushing the side of the front lid.

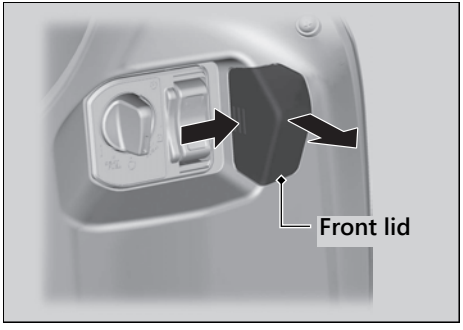

2. Align the projection of the emergency key with the slot of the emergency seat opener, and turn the emergency key counterclockwise.

3. Open the seat and turn the emergency key clockwise.

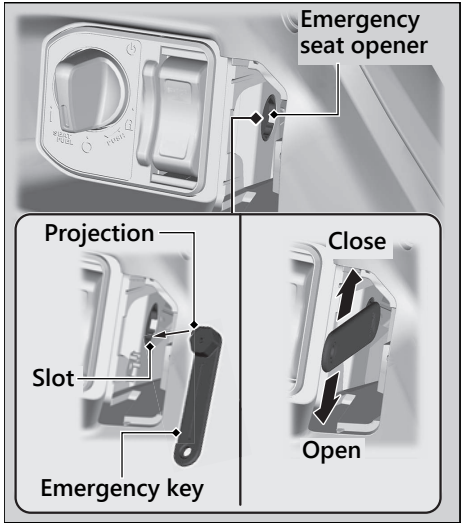

Close

1. Close and push down on the rear of the seat until it locks. Make sure that the seat is locked securely by pulling it up lightly. If the seat is not locked, turn the emergency key clockwise to lock the seat catch.
2. Install the front lid.
   Make sure that all tabs are installed securely in position.

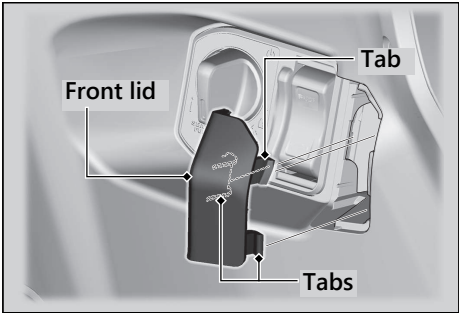

Set up to ID number input mode

1. Check the ID number on the ID tag.
2. Press and hold the ignition switch for more than 4 seconds.
   ▶ The Honda SMART Key indicator flashes.
3. Press the ignition switch while the Honda SMART Key indicator is flashing.
   ▶ The Honda SMART Key indicator stay lit, and the ID number input mode turns on.

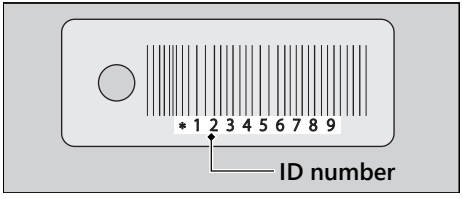

ID number input

You can input your ID number by pressing the ignition switch when the ignition switch is (Off), (Lock) or SEAT FUEL position.
Input the ID number on the ID tag in order from the left in turn by pressing the ignition switch.
The ID number is authenticated according to the number of times the ignition switch is pushed.
Push the ignition switch the desired number of times within 5 seconds when the Honda SMART Key indicator comes on. After 5 seconds, the Honda SMART Key indicator goes off and comes on again. This means that the inputted number is fixed, and you can input the next number.

▶ If the Honda SMART Key indicator does not come on, the battery may be low. Contact your dealer.

Example:

- To input "0", wait for 5 seconds without pushing the ignition switch when the Honda SMART Key indicator comes on.
- To input "1", push the ignition switch once within 5 seconds when the Honda SMART Key indicator comes on.

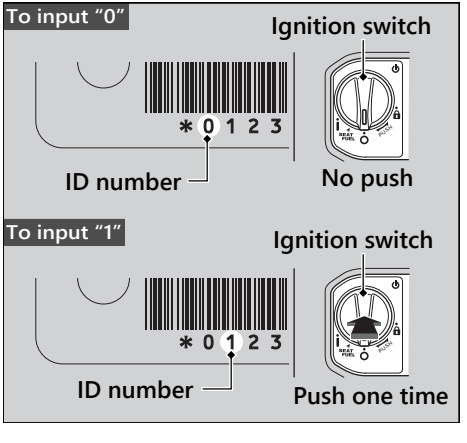

ID number input success

After the last ID number is input, the Honda SMART Key indicator goes off, and when it comes on again the ignition switch is unlocked.

Turn the ignition switch to the | (On) position within 6 minutes. You can start the engine.

To lock the ignition switch, turn the ignition switch to the SEAT FUEL, ○ (Off), or 🔒 (Lock) position, and press and hold the ignition switch for 2 seconds. The ignition switch also locks automatically when the ignition switch has been in the SEAT FUEL, ○ (Off), or 🔒 (Lock) position for about 6 minutes after the ID number is successfully inputted.

When the ignition switch is locked, the Honda SMART Key indicator goes off, the turn signals flash once, and the buzzer rings 1 time.

To unlock the ignition switch again, repeat the procedure for unlocking the ignition switch.

ID number input failure

After the last ID number is input, the Honda SMART Key indicator flash at 1 second intervals, and then go off.

The buzzer also rings at this time.

The ignition switch does not unlock.

Redo the "Unlock the Ignition Switch in an Emergency" procedure. P. 123

ID number input cancel

If you make a mistake while inputting your ID, do one of the following:

- Press and hold the ignition switch until the buzzer rings once, the Honda SMART Key indicator to turn off.
- Do not press the ignition switch, just wait for the Honda SMART Key indicator to turn off.

Redo the "Unlock the Ignition Switch in an Emergency" procedure. P. 123

Repairing a puncture or removing a wheel requires special tools and technical expertise. We recommend you have this type of service performed by your dealer.
After an emergency repair, always have the tyre inspected/replaced by your dealer.

Emergency Repair Using a Tyre Repair Kit

If your tyre has a minor puncture, you can make an emergency repair using a tubeless tyre repair kit.
Follow the instructions provided with the emergency tyre repair kit.
Riding your vehicle with a temporary tyre repair is very risky. Do not exceed 50 km/h (30 mph). Have the tyre replaced by your dealer as soon as possible.

⚠WARNING

Riding your vehicle with a temporary tyre repair can be risky. If the temporary repair fails, you can crash and be seriously injured or killed.

If you must ride with a temporary tyre repair, ride slowly and carefully and do not exceed 50 km/h (30 mph) until the tyre is replaced.

Battery Goes Dead

Charge the battery using a motorcycle battery charger.
Remove the battery from the vehicle before charging.
Do not use an automobile-type battery charger, as these can overheat a motorcycle battery and cause permanent damage. If the battery does not recover after recharging, contact your dealer.

NOTICE
Jump starting using an automobile battery can damage your vehicle's electrical system and is not recommended.

Burned-out Light Bulb

Follow the procedure below to replace a burned-out light bulb.
Turn the ignition switch to the ○ (Off) or 🔒 (Lock) position.
Allow the bulb to cool before replacing it.
Do not use bulbs other than those specified.
Check the replacement bulb for correct operation before riding.
For the light bulb wattage, see "Specifications." P. 148

The headlight, brakelight and taillight, license plate light, and position light uses several LEDs. If there is an LED which is not turned on, see your dealer for servicing.

Front Turn Signal Bulb

The right and left front turn signal bulbs can be removed in the same manner.

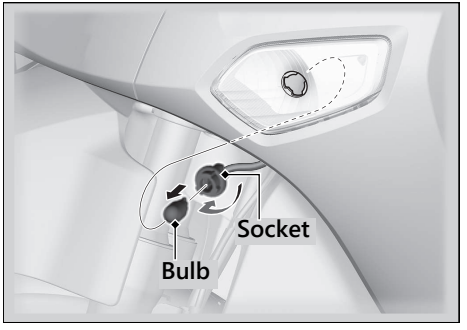

1. Turn the socket counterclockwise and pull it out.
2. Pull out the bulb without turning it.
3. Install a new bulb in the reverse order of removal.
   ▶ Use only the amber bulb.

Rear Turn Signal Bulb

The right and left rear turn signal bulbs can be removed in the same manner.

1. Remove the bulb maintenance cover by removing the clip. P. 92

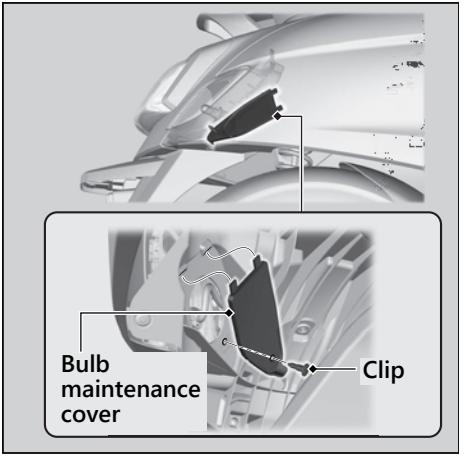

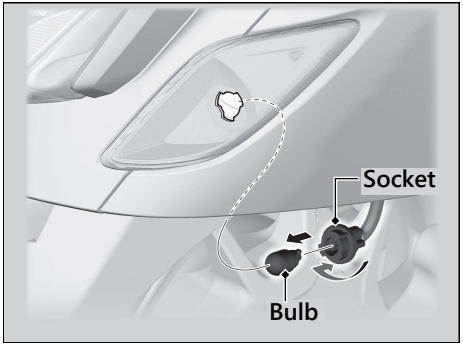

2. Turn the socket counterclockwise and pull it out.
3. Pull out the bulb without turning it.
4. Install a new bulb and parts in the reverse order of removal.
▶ Use only the amber bulb.

Blown Fuse

Before handling fuses, see "Inspecting and Replacing Fuses." P. 84

Fuse Box Fuses

1. Remove the front centre cover. P. 93
2. Remove the fuse box cover.
3. Pull the main fuse and other fuses out one by one with the fuse puller and check for a blown fuse. Always replace a blown fuse with a spare fuse of the same rating.
   ▶ Spare fuses and fuse puller are provided on back side of the fuse box cover.
4. Install the fuse box cover.
5. Install the front centre cover.

NOTICE
If a fuse fails repeatedly, you likely have an electrical problem. Have your vehicle inspected by your dealer.

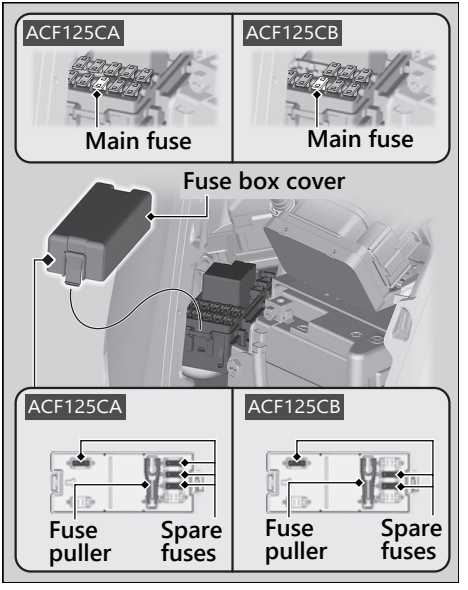

Unstable Engine Operation Occurs Intermittently

If the fuel pump filter is clogged, unstable engine operation will occur intermittently while riding.
Even if this symptom occurs, you can continue to ride your vehicle.
If unstable engine operation occurs even if sufficient fuel is available, have your vehicle inspected by your dealer as soon as possible.

Information

Keys..... P. 133
Instruments, Controls, & Other Features... P. 136
Caring for Your Vehicle..... P. 137
Storing Your Vehicle..... P. 140
Transporting Your Vehicle ..... P. 141
You & the Environment ..... P. 142
Serial Numbers ..... P. 143
Fuels Containing Alcohol ..... P. 144
Catalytic Converter ..... P. 145

Keys

Emergency Key

The emergency key is used for an emergency.

● To unlock the seat. P. 121

Do not store the emergency key in any compartment.

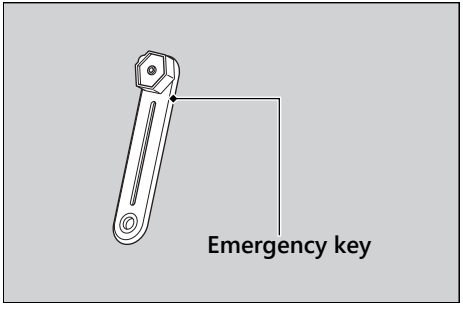

Honda SMART Key

Carrying the Honda SMART Key allows you to perform the following operations:

- Locking or unlocking the ignition switch
- Unlocking the seat lock
- Locking or unlocking the steering
- Opening the fuel lid

The ID number of the Honda SMART Key is on the ID tag. You can also unlock the ignition switch by inputting the ID number.

Always carry both the emergency key and ID tag, but separate from the Honda SMART Key, to avoid losing all of them at the same time.

Also store a copy of your ID number in a safe place other than your vehicle.

The Honda SMART Key contains electronic circuits. If the circuits are damaged, the Honda SMART Key will not allow you to perform any operations.

- Do not drop the Honda SMART Key or set heavy objects on them.
- Protect the Honda SMART Key from direct sunlight, high temperature, and high humidity.
- Do not scratch or puncture.
- Do not store near any magnetized products such as a magnetized key chain.
- Always keep the Honda SMART Key away from electric appliances such as a TV, radio, PC or low-frequency massage device.
- Keep the Honda SMART Key away from liquids. If it gets wet, dry it immediately with a soft cloth.
- Keep the Honda SMART Key away from the vehicle while washing the vehicle.
- Do not burn.
- Do not wash in an ultrasonic cleaner.
- If fuel, wax, or grease adhere to the Honda SMART Key, wipe it off immediately to avoid cracking or warping.
- Do not disassemble the Honda SMART Key other than when changing a battery. Only the cover of the Honda SMART Key can be disassembled. Do not disassemble other parts.
- Do not lose your Honda SMART Key. If you lose it, you will need to register a new Honda SMART Key. See your dealer with your emergency key and ID tag for registration.

The battery in the Honda SMART Key system normally lasts about 2 years.

Do not keep mobile phones or other radio transmitting devices in any compartment. The radio frequency from the devices will interrupt the Honda SMART Key system.

To get an additional Honda SMART Key, take the Honda SMART Key and the vehicle to your dealer.

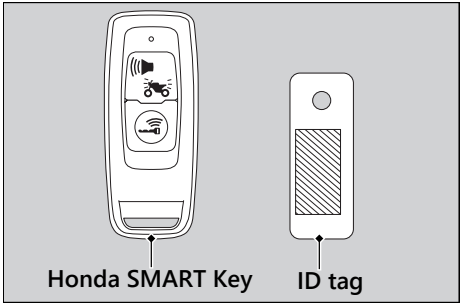

Thailand only

กสทช.

เครื่องวิทยุคมนาคมนี้ ได้รับยกเว้น ไม่ต้องได้รับใบอนุญาตให้มี ใช้ซึ่งเครื่องวิทยุคมนาคม หรือตั้งสถานีวิทยุคมนาคมตามประกาศ กสทช. เรื่อง เครื่องวิทยุคมนาคม และสถานีวิทยุคมนาคมที่ได้รับยกเว้นไม่ต้องได้รับใบอนุญาต วิทยุคมนาคมตามพระราชบัญญัติวิทยุคมนาคม พ.ศ. 2498

กสทช. | โทรคมนาคม
กำกับดูแลเพื่อประชาชน
Call Center 1200 (โทรฟรี)

Instruments, Controls, & Other Features

Ignition Switch

Leaving the ignition switch in the ❙ (On) position with the engine stopped will drain the battery.

Do not turn the ignition switch while riding.

Odometer

The display remains at 999,999 when the odometer exceeds 999,999.

Tripmeter

Each tripmeter resets to 0.0 when the trip mileage exceeds 999.9.

Document Bag

The owner's manual, registration, and insurance information can be stored in the plastic document bag located reverse side of the seat.

Caring for Your Vehicle

Frequent cleaning and polishing is important to ensure the life of your Honda. A clean vehicle makes it easier to spot potential problems.
In particular, seawater and salts used to prevent ice on roads promote the formation of corrosion. Always wash your vehicle thoroughly after riding on coastal or treated roads.

Washing

Allow the engine, muffler, brakes, and other high-temperature parts to cool before washing.

1. Rinse your vehicle thoroughly using a low pressure garden hose to remove loose dirt.
2. If necessary, use a sponge or a soft towel with mild cleaner to remove road grime.
   ▶ Clean the headlight lens, panels, and other plastic components with extra care to avoid scratching them.
   Avoid directing water into the air cleaner, muffler, and electrical parts.
3. Thoroughly rinse your vehicle with plenty of clean water and dry with a soft, clean cloth.
4. After the vehicle dries, lubricate any moving parts.
   ▶ Make sure that no lubricant spills onto the brakes or tyres. Brake discs, pads, drum or shoes contaminated with oil will suffer greatly reduced braking effectiveness and can lead to a crash.
5. Apply a coat of wax to prevent corrosion.
   ▶ Avoid products that contain harsh detergents or chemical solvents. These can damage the metal, paint, and plastic on your vehicle.
   Keep the wax clear of the tyres and brakes.
   ▶ If your vehicle has any mat painted parts, do not apply a coat of wax to the mat painted surface.

Washing Precautions

Follow these guidelines when washing:

- Do not use high-pressure washers:
  - ▶ High-pressure water cleaners can damage moving parts and electrical parts, rendering them inoperable.
  - ▶ Water in the air intake can be drawn into the throttle body and/or enter the air cleaner.
- Do not direct water at the muffler:
  - ▶ Water in the muffler can prevent starting and causes rust in the muffler.
- Dry the brakes:
  - ▶ Water adversely affects braking effectiveness. After washing, apply the brakes intermittently at low speed to help dry them.
- Do not direct water under the seat:
  - ▶ Water in the under seat compartment can damage your documents and other belongings.
- Do not direct water at the air cleaner:
  - ▶ Water in the air cleaner can prevent the engine from starting.
- Do not direct water near the headlight:
  - ▶ The headlight's inside lens may fog temporarily after washing or while riding in the rain. This does not impact the headlight function.
    However, if you see a large amount of water or ice accumulated inside the lens(es), have your vehicle inspected by your dealer.
- Do not use wax or polishing compounds on mat painted surfaces:
  - ▶ Use a soft cloth or sponge, plenty of water, and a mild detergent to clean mat painted surfaces. Dry with a soft clean cloth.

Aluminium Components

Aluminium will corrode from contact with dirt, mud, or road salt. Clean aluminium parts regularly and follow these guidelines to avoid scratches:

- Do not use stiff brushes, steel wool, or cleaners containing abrasives.
- Avoid riding over or scraping against curbs.

Panels

Follow these guidelines to prevent scratches and blemishes:

- Wash gently using a soft sponge and plenty of water.
- To remove stubborn stains, use diluted detergent and rinse thoroughly with plenty of water.
- Avoid getting petrol, brake fluid, or detergents on the instruments, panels, or headlight.

Exhaust Pipe and Muffler

If the exhaust pipe and muffler are painted, do not use a commercially available abrasive kitchen cleaning compound. Use a neutral detergent to clean the painted surface on the exhaust pipe and muffler. If you are not sure if your exhaust pipe and muffler are painted, contact your dealer.

Storing Your Vehicle

If you store your vehicle outdoors, you should consider using a full-body cover.
If you won't be riding for an extended period, follow these guidelines:

- Wash your vehicle and wax all painted surfaces (except mat painted surfaces). Coat chrome pieces with rust-inhibiting oil.
- Place your vehicle on its centre stand and position a block so that both tyres are off the ground.
- After rain, remove the body cover and allow the vehicle to dry.
- Remove the battery (P. 91) to prevent discharge. Fully charge the battery and then place it in a shaded, well-ventilated area.
  - If you leave the battery in place, disconnect the negative ⊖ terminal to prevent discharge.

After removing your vehicle from storage, inspect all maintenance items required by the Maintenance Schedule.

Transporting Your Vehicle

If your vehicle needs to be transported, it should be carried on a motorcycle trailer or a flatbed truck or trailer that has a loading ramp or lifting platform and motorcycle tie-down straps. Never try to tow your vehicle with a wheel or wheels on the ground.

NOTICE

Towing your vehicle with a wheel or wheels on the ground can cause serious damage to the transmission.

You & the Environment

Owning and riding a vehicle can be enjoyable, but you must do your part to protect the environment.

Choose Sensible Cleaners

Use a biodegradable detergent when you wash your vehicle. Avoid aerosol spray cleaners that contain chlorofluorocarbons (CFCs) which damage the atmosphere's protective ozone layer.

Recycle Wastes

Put oil and other toxic wastes in approved containers and take them to a recycling centre. Call your local or state office of public works or environmental services to find a recycling centre in your area and to get instructions on how to dispose of non-recyclable wastes. Do not place used engine oil in the trash or pour it down a drain or on the ground. Used oil, petrol, coolant, and cleaning solvents contain poisons that can hurt refuse workers and contaminate drinking water, lakes, rivers, and oceans.

Serial Numbers

The frame and engine serial numbers uniquely identify your vehicle and are required in order to register your vehicle. They may also be required when ordering replacement parts.

To check the frame number, open the seat.
➔P. 71

You should record these numbers and keep them in a safe place.

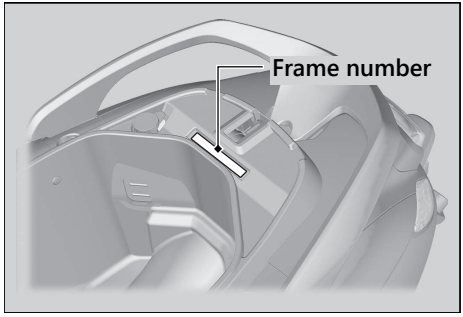

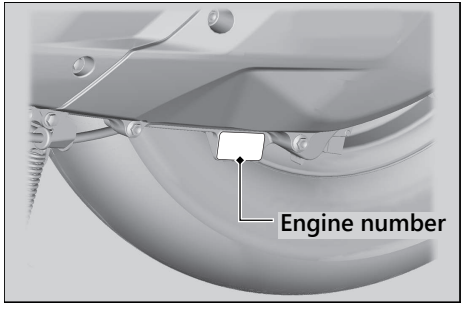

Fuels Containing Alcohol

Some conventional fuels blended with alcohol are available in some locales to help reduce emissions to meet clean air standards. If you plan to use blended fuel, check that it is unleaded and meets the minimum octane rating requirement.

The following fuel blends can be used in your vehicle:

TH, II TH type

- Ethanol (ethyl alcohol) up to 20% by volume.
  ▶ Petrol containing ethanol may be marketed under the name Gasohol.

NOTICE

Use of blended fuels containing higher than approved percentages can damage metal, rubber, plastic parts of your fuel system.

If you notice any undesirable operating symptoms or performance problems, try a different brand of petrol.

Except TH, II TH type

- Ethanol (ethyl alcohol) up to 10% by volume.
  ▶ Petrol containing ethanol may be marketed under the name Gasohol.

The use of petrol containing more than 10% ethanol may:

- Damage the painting of the fuel tank.
- Damage the rubber tubes of the fuel line.
- Cause corrosion of the fuel tank.
- Cause poor drivability.

NOTICE

Use of blended fuels containing higher than approved percentages can damage metal, rubber, plastic parts of your fuel system.

If you notice any undesirable operating symptoms or performance problems, try a different brand of petrol.

Catalytic Converter

This vehicle is equipped with a three-way catalytic converter. The catalytic converter contains precious metals that serve as catalysts in high temperature chemical reactions that convert hydrocarbons (HC), carbon monoxide (CO), and oxides of nitrogen (NOx) in the exhaust gases into safe compounds.

A defective catalytic converter contributes to air pollution and can impair your engine's performance. A replacement unit must be an original Honda part or equivalent.

Follow these guidelines to protect your vehicle's catalytic converter:

- Always use unleaded petrol. Leaded petrol will damage the catalytic converter.
- Keep the engine in good running condition.
- Have your vehicle serviced if your engine is misfiring, backfiring, stalling, or otherwise not running properly, stop riding and turn off the engine.

■ Main Components

Overall length	1,902 mm (74.9 in)	
Overall width	**ACF125CA**	683 mm (26.9 in)
	ACF125CB	681 mm (26.8 in)
Overall height	1,144 mm (45.0 in)	
Wheelbase	1,312 mm (51.7 in)	
Minimum ground clearance	155 mm (6.1 in)	
Caster angle	26º 30′	
Trail	79 mm (3.1 in)	
Curb weight	**ACF125CA**	118 kg (260 lb)
	ACF125CB	116 kg (256 lb)
Maximum weight capacity *1	176 kg (388 lb)	
Maximum luggage weight	Centre compartment	10 kg (22 lb)
	Hook/Inner rack	1.5 kg (3.3 lb)
Passenger capacity	Rider and 1 passenger	
Minimum turning radius	2.00 m (6.6 ft)	

*1 : Including rider, passenger, all luggage, and accessories.

Displacement	124.77 cm^3 (7.611 cu-in)	
Bore x stroke	53.500 x 55.502 mm (2.1063 x 2.1851 in)	
Compression ratio	11.5:1	
Fuel	Unleaded petrol Recommended: 91 RON or higher	
Fuel containing alcohol	**TH, II TH type**	ETHANOL up to 20 % by volume
	Except TH, II TH type	ETHANOL up to 10 % by volume
Tank capacity	5.4 L (1.43 US gal, 1.19 Imp gal)	
Battery	YTZ6V 12 V-5 Ah (10 HR)	
Primary reduction	V-Matic (2.65:1 - 0.82:1)	
Final reduction	10.552	

Service Data

Tyre size	Front	100/90-12 59J
	Rear	110/90-12 64J
Tyre type		Bias-ply, tubeless
Recommended Tyre	Front	DURO DM1321F
	Rear	DURO DM1321
Tyre air pressure (Drivers only)	Front	200 kPa (2.00 kgf/cm², 29 psi)
	Rear	225 kPa (2.25 kgf/cm², 33 psi)
Tyre air pressure (Driver and passenger)	Front	200 kPa (2.00 kgf/cm², 29 psi)
	Rear	225 kPa (2.25 kgf/cm², 33 psi)
Spark plug	(standard)	LMAR8L-9 (NGK)
Spark plug gap		0.8 - 0.9 mm (0.03 - 0.04 in)
Idle speed		1,700 ± 100 rpm

Recommended engine oil	Honda 4-stroke motorcycle oil API Service Classification SJ or higher, excluding oils marked as "Energy Conserving" or "Resource Conserving, "SAE 10W-30, JASO T 903 standard MB	
Engine oil capacity	After draining	0.8 L (0.8 US qt, 0.7 Imp qt)
	After draining & cleaning strainer screen	0.85 L (0.90 US qt, 0.75 Imp qt)
	After disassembly	0.9 L (1.0 US qt, 0.8 Imp qt)
Transmission oil capacity	After draining	0.12 L (0.13 US qt, 0.11 Imp qt)
	After disassembly	0.14 L (0.15 US qt, 0.12 Imp qt)
Recommended brake fluid	Honda DOT 3 or DOT 4 Brake Fluid	
Cooling system capacity	0.50 L (0.53 US qt, 0.44 Imp qt)	
Recommended coolant	HONDA PRE-MIX COOLANT	

■ Bulbs

Headlight	LED
Brakelight/Taillight	LED
Front turn signal	12 V-10 W × 2
Rear turn signal	12 V-10 W × 2
License plate light	LED
Position light	LED

■ Fuses

Main fuse		20 A
Other fuse	**ACF125CA**	15 A, 10 A, 7.5 A
	ACF125CB	10 A, 7.5 A

HONDA

The Power of Dreams



4PK3MB00
00X4P-K3M-B000