HONDA

NEW WAVE 110

OWNER'S MANUAL

- WARRANTY POLICY
- LIST OF SERVICE PROVIDERS



NEW WAVE 110 R



AFB110MD/MS

*14 Point Free Check-Up

REGISTER NOW!!!

FOR A HASSLE FREE WARRANTY

This manual should be considered a permanent part of the motorcycle and should remain with the motorcycle when it is resold.

This publication includes the latest production information available before printing. Honda Motor Co., Ltd. reserves the right to make changes at any time without notice and without incurring any obligation.

No part of this publication may be reproduced without written permission.

The vehicle pictured in this owner's manual may not match your actual vehicle.

© 2017 Honda Motor Co., Ltd.

Welcome

Congratulations on your purchase of a new Honda motorcycle. Your selection of a Honda makes you part of a worldwide family of satisfied customers who appreciate Honda's reputation for building quality into every product.

To ensure your safety and riding pleasure:

- Read this owner's manual carefully.
- Follow all recommendations and procedures contained in this manual.
- Pay close attention to safety messages contained in this manual and on the motorcycle.
- The following codes in this manual indicate the country.
- The illustrations here in are based on the AFB110MD PH type.

Country Codes

Code	Country
AFB110MD	
PH	Philippines
AFB110MS	
PH	Philippines

A Few Words About Safety

Your safety, and the safety of others, is very important. Operating this motorcycle safely is an important responsibility.
To help you make informed decisions about safety, we have provided operating procedures and other information on safety labels and in this manual. This information alerts you to potential hazards that could hurt you or others.
Of course, it is not practical or possible to warn you about all hazards associated with operating or maintaining a motorcycle. You must use your own good judgement.

You will find important safety information in a variety of forms, including:

- Safety labels on the motorcycle
- Safety Messages preceded by a safety alert symbol ⚠ and one of three signal words: DANGER, WARNING, or CAUTION.
  These signal words mean:

⚠DANGER

You WILL be KILLED or SERIOUSLY HURT if you don't follow instructions.

⚠WARNING

You CAN be KILLED or SERIOUSLY HURT if you don't follow instructions.

⚠CAUTION

You CAN be HURT if you don't follow instructions.

Other important information is provided under the following titles:

NOTICE Information to help you avoid damage to your motorcycle, other property, or the environment.

Contents

Motorcycle Safety	P. 2
Operation Guide	P. 12
Maintenance	P. 33
Troubleshooting	P. 77
Information	P. 92
Specifications	P. 103
Index	P. 106

Motorcycle Safety

This section contains important information for safe riding of your motorcycle.
Please read this section carefully.

Safety Guidelines ..... P. 3
Safety Precautions ..... P. 6
Riding Precautions ..... P. 7
Accessories & Modifications ..... P. 10
Loading ..... P. 11

Safety Guidelines

Follow these guidelines to enhance your safety:

- Perform all routine and regular inspections specified in this manual.
- Stop the engine and keep sparks and flame away before filling the fuel tank.
- Do not run the engine in enclosed or partly enclosed areas. Carbon monoxide in exhaust gases is toxic and can kill you.

Always Wear a Helmet

It's a proven fact: helmets and protective apparel significantly reduce the number and severity of head and other injuries. So always wear an approved motorcycle helmet and protective apparel. ➡ P. 6

Before Riding

Make sure that you are physically fit, mentally focused and free of alcohol and drugs. Check that you and your passenger are both wearing an approved motorcycle helmet and protective apparel. Instruct your passenger on holding onto the grab rail or your waist, leaning with you in turns, and keeping their feet on the footpegs, even when the motorcycle is stopped.

Take Time to Learn & Practice

Even if you have ridden other motorcycles, practice riding in a safe area to become familiar with how this motorcycle works and handles, and to become accustomed to the motorcycle's size and weight.

Ride Defensively

Always pay attention to other vehicles around you, and do not assume that other drivers see you. Be prepared to stop quickly or perform an evasive maneuver.

continued

Make Yourself Easy to See

Make yourself more visible, especially at night, by wearing bright reflective clothing, positioning yourself so other drivers can see you, signaling before turning or changing lanes, and using your horn when necessary.

Ride within Your Limits

Never ride beyond your personal abilities or faster than conditions warrant. Fatigue and inattention can impair your ability to use good judgement and ride safely.

Don't Drink and Ride

Alcohol and riding don't mix. Even one alcoholic drink can reduce your ability to respond to changing conditions, and your reaction time gets worse with every additional drink. Don't drink and ride, and don't let your friends drink and ride either.

Keep Your Honda in Safe Condition

It's important to keep your motorcycle properly maintained and in safe riding condition. Inspect your motorcycle before every ride and perform all recommended maintenance. Never exceed load limits (P. 11), and do not modify your motorcycle or install accessories that would make your motorcycle unsafe (P. 10).

If You are Involved in a Crash

Personal safety is your first priority. If you or anyone else has been injured, take time to assess the severity of the injuries and whether it is safe to continue riding. Call for emergency assistance if needed. Also follow applicable laws and regulations if another person or vehicle is involved in the crash.

If you decide to continue riding, first turn the ignition switch to the OFF position, and evaluate the condition of your motorcycle. Inspect for

fluid leaks, check the tightness of critical nuts and bolts, and check the handlebar, control levers, brakes, and wheels. Ride slowly and cautiously. Your motorcycle may have suffered damage that is not immediately apparent. Have your motorcycle thoroughly checked at a qualified service facility as soon as possible.

Carbon Monoxide Hazard

Exhaust contains poisonous carbon monoxide, a colourless, odorless gas. Breathing carbon monoxide can cause loss of consciousness and may lead to death.

If you run the engine in confined or even partly enclosed area, the air you breathe could contain a dangerous amount of carbon monoxide. Never run your motorcycle inside a garage or other enclosure.

⚠WARNING

Running the engine of your motorcycle while in an enclosed or even partially enclosed area can cause a rapid build-up of toxic carbon monoxide gas.

Breathing this colourless, odorless gas can quickly cause unconsciousness and lead to death.

Only run your motorcycle's engine when it is located in a well ventilated area outdoors.

Safety Precautions

- Ride cautiously and keep your hands on the handlebar and feet on the footpegs.
- Keep passenger's hands onto the grab rail or your waist, passenger's feet on the footpegs while riding.
- Always consider the safety of your passenger, as well as other drivers and riders.

Protective Apparel

Make sure that you and any passenger are wearing an approved motorcycle helmet, eye protection, and high-visibility protective clothing. Ride defensively in response to weather and road conditions.

Helmet

Safety-standard certified, high-visibility, correct size for your head

- Must fit comfortably but securely, with the chin strap fastened.
- Face shield with unobstructed field of vision or other approved eye protection

⚠WARNING

Not wearing a helmet increases the chance of serious injury or death in a crash.

Make sure that you and any passenger always wear an approved helmet and protective apparel.

Gloves

Full-finger leather gloves with high abrasion resistance

Boots or Riding Shoes

Sturdy boots with non-slip soles and ankle protection

Jacket and Trousers

Protective, highly visible, long-sleeved jacket and durable trousers for riding (or a protective suit)

Riding Precautions

Running-in Period

During the first 500 km (300 miles) of running, follow these guidelines to ensure your motorcycle's future reliability and performance.

- Avoid full-throttle starts and rapid acceleration.
- Avoid hard braking and rapid down-shifts.
- Ride conservatively.

Brakes

Observe the following guidelines:

- Avoid excessively hard braking and downshifting.
  - ▶ Sudden braking can reduce the motorcycle's stability.
  - ▶ Where possible, reduce speed before turning; otherwise you risk sliding out.
- Exercise caution on low traction surfaces.
  - ▶ The tyres slip more easily on such surfaces and braking distances are longer.
- Avoid continuous braking.
  - ▶ Repeated braking, such as when descending long, steep slopes can seriously overheat the brakes, reducing their effectiveness. Use engine braking with intermittent use of the brakes to reduce speed.
- For full braking effectiveness, operate both the front and rear brakes together.

continued

Engine Braking

Engine braking helps slow your motorcycle down when you release the throttle. For further slowing action, downshift to a lower gear. Use engine braking with intermittent use of the brakes to reduce speed when descending long, steep slopes.

Wet or Rainy Conditions

Road surfaces are slippery when wet, and wet brakes further reduce braking efficiency. Exercise extra caution when braking in wet conditions.

If the brakes get wet, apply the brakes while riding at low speed to help them dry.

Parking

- Park on a firm, level surface.
- If you must park on a slight incline or loose surface, park so that the motorcycle cannot move or fall over.
- Make sure that high-temperature parts cannot come into contact with flammable materials.
- Do not touch the engine, muffler, brakes and other high-temperature parts until they cool down.
- To reduce the likelihood of theft, always lock the handlebar and remove the key and close the shutter when leaving the motorcycle unattended.
  Use of an anti-theft device is also recommended.

Parking with the Side Stand or Centre Stand

1. Stop the engine.
2. **Using the side stand**
   Push the side stand down.

Slowly lean the motorcycle to the left until its weight rests on the side stand.

Using the centre stand

To lower the centre stand, stand on the left side of the motorcycle. Hold the left handle grip and the grab rail. Press down on the tip of the centre stand with your right foot and, simultaneously, pull up and back.

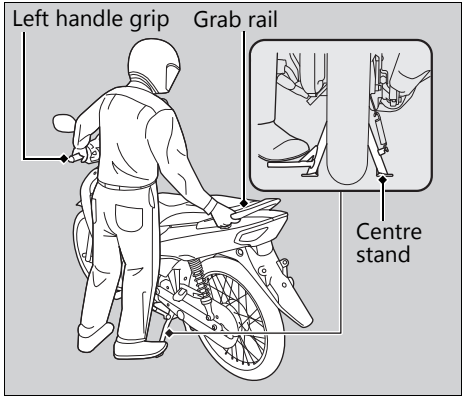

3. Turn the handlebar fully to the left.
▶ Turning the handlebar to the right reduces stability and may cause the motorcycle to fall.

4. Turn the ignition switch to the LOCK position, remove the key and close the shutter. ➡ P. 22

5. Turn the fuel valve to the OFF position.

Refuelling and Fuel Guidelines

Follow these guidelines to protect the engine, fuel system and catalytic converter:

- Use only unleaded petrol.
- Use recommended octane number. Using lower octane petrol will result in decreased engine performance.
- Do not use fuels containing a high concentration of alcohol. ➡ P. 101
- Do not use stale or contaminated petrol or an oil/petrol mixture.
- Avoid getting dirt or water in the fuel tank.

Accessories & Modifications

We strongly advise that you do not add any accessories that were not specifically designed for your motorcycle by Honda or make modifications to your motorcycle from its original design. Doing so can make it unsafe. Modifying your motorcycle may also void your warranty and make your motorcycle illegal to operate on public roads and highways. Before deciding to install accessories on your motorcycle be certain the modification is safe and legal.

⚠WARNING

Improper accessories or modifications can cause a crash in which you can be seriously hurt or killed.

Follow all instructions in this owner's manual regarding accessories and modifications.

Do not pull a trailer with, or attach a sidecar to, your motorcycle. Your motorcycle was not designed for these attachments, and their use can seriously impair your motorcycle's handling.

Loading

- Carrying extra weight affects your motorcycle's handling, braking and stability. Always ride at a safe speed for the load you are carrying.
- Avoid carrying an excessive load and keep within specified load limits.
  Maximum weight capacity / Maximum luggage weight ➡ P. 103
- Tie all luggage securely, evenly balanced and close to the centre of the motorcycle.
- Do not place objects near the lights or the muffler.

⚠WARNING

Overloading or improper loading can cause a crash and you can be seriously hurt or killed.

Follow all load limits and other loading guidelines in this manual.

Basic Operation Flow

Pre-ride Inspection P. 38

Carefully inspect your motorcycle to make sure that it is safe to ride.

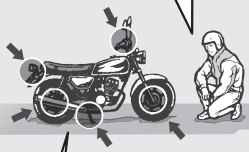

How to use basic features.

- Instruments P. 18
- Indicators P. 19
- Switches P. 20
- Steering Lock P. 21
- Shutter P. 22

Starting the Engine P. 24

Start and warm the engine.
Avoid revving the engine.

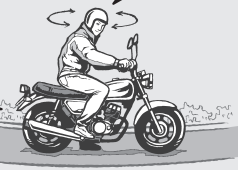

Starting the Motorcycle

Before pulling away, indicate your direction with the turn signal switch, and check for oncoming traffic.

Acceleration

Apply throttle gradually.
Obey the speed limit.



Shift Change P. 27



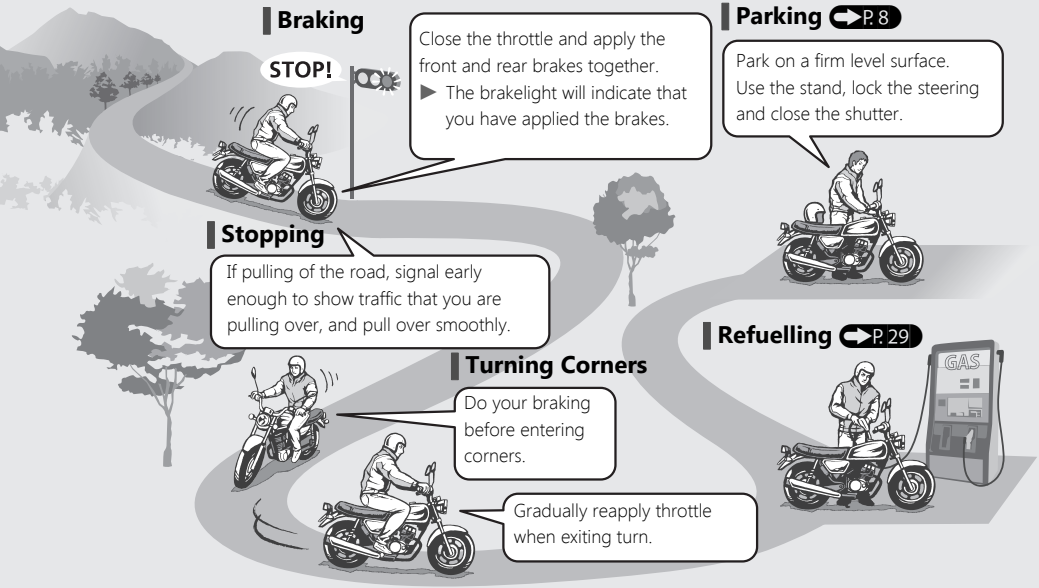
Braking
STOP!
Close the throttle and apply the front and rear brakes together.
▶ The brakelight will indicate that you have applied the brakes.
Parking P. 8
Park on a firm level surface.
Use the stand, lock the steering and close the shutter.
Stopping
If pulling of the road, signal early enough to show traffic that you are pulling over, and pull over smoothly.
Refuelling P. 29
GAS
Turning Corners
Do your braking before entering corners.
Gradually reapply throttle when exiting turn.

Parts Location

AFB110MD

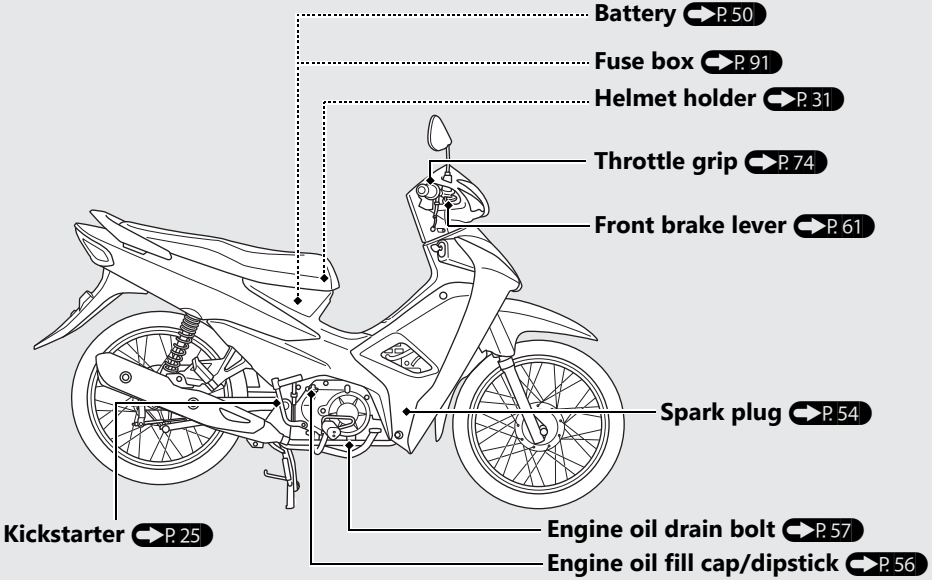

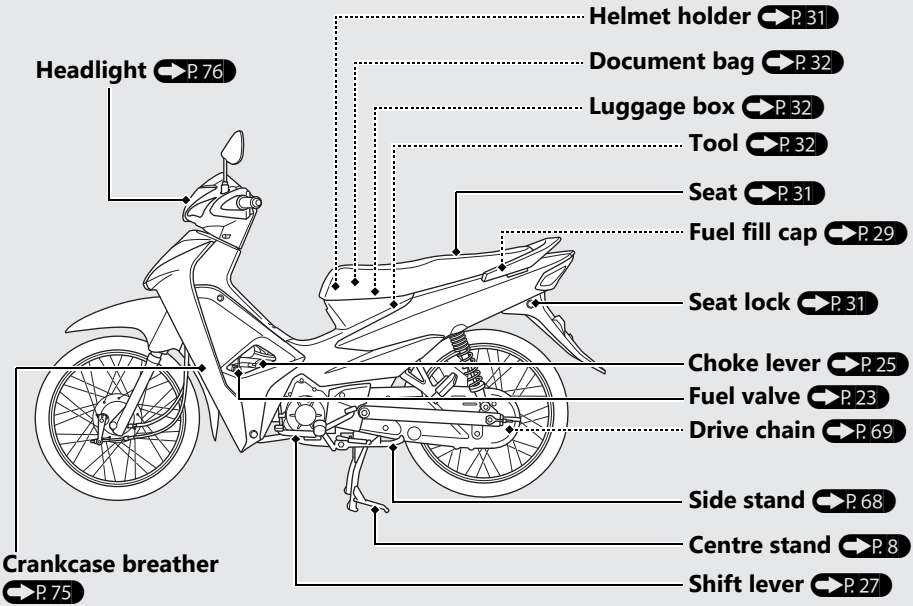
Helmet holder P. 31
Document bag P. 32
Luggage box P. 32
Tool P. 32
Seat P. 31
Fuel fill cap P. 29
Seat lock P. 31
Choke lever P. 25
Fuel valve P. 23
Drive chain P. 69
Side stand P. 68
Centre stand P. 8
Shift lever P. 27
Headlight P. 76
Crankcase breather P. 75

continued

Parts Location *(Continued)*

AFB110MS

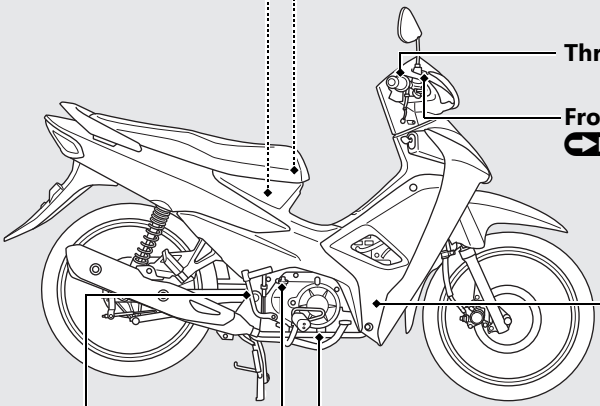

Battery P. 50

Fuse box P. 91

Helmet holder P. 31

Throttle grip P. 74

Front brake fluid reservoir P. 59

Spark plug P. 54

Kickstarter P. 25

Engine oil drain bolt P. 57

Engine oil fill cap/dipstick P. 56

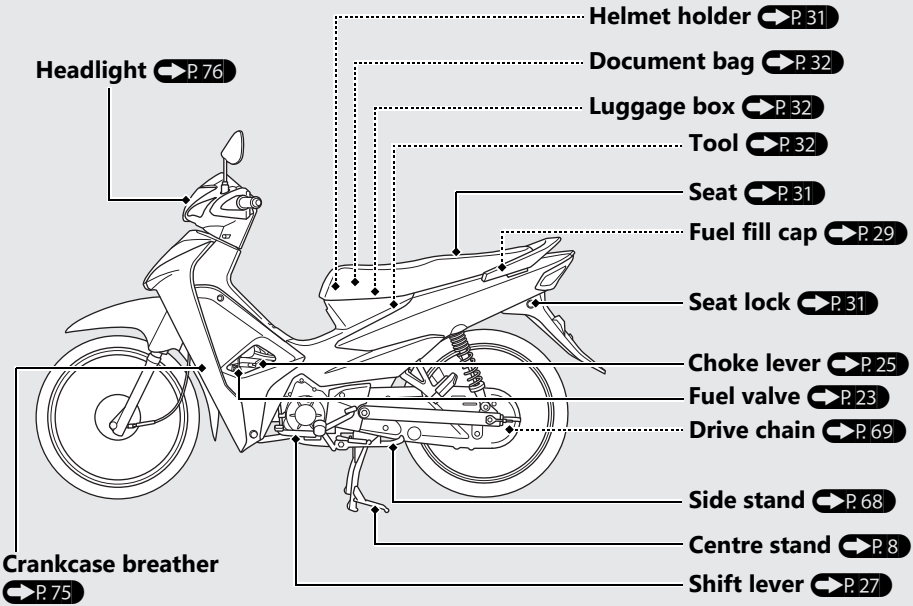
Helmet holder P. 31
Document bag P. 32
Luggage box P. 32
Tool P. 32
Seat P. 31
Fuel fill cap P. 29
Seat lock P. 31
Choke lever P. 25
Fuel valve P. 23
Drive chain P. 69
Side stand P. 68
Centre stand P. 8
Shift lever P. 27
Headlight P. 76
Crankcase breather P. 75

Instruments

Speedometer

Gear range
Shows proper speed range for each gear.

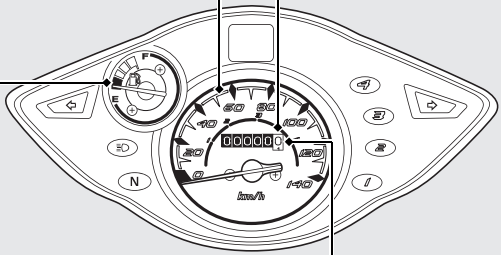

Fuel gauge
Needle in the red mark, remaining fuel approximately 1.02 litres (0.269 US gal, 0.224 Imp gal)

Odometer
Total distance ridden.

Indicators

If one of these indicators does not come on when it should, have your dealer check for problems.

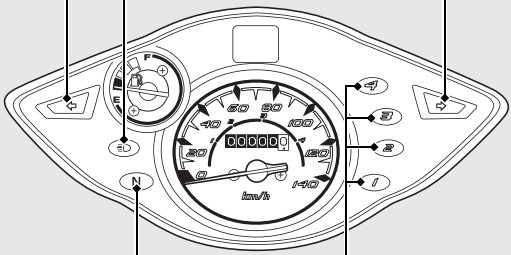

N Neutral indicator
Comes on when the transmission is in Neutral.

Gear position indicators
Indicates 1st to 4th gear position.

Switches

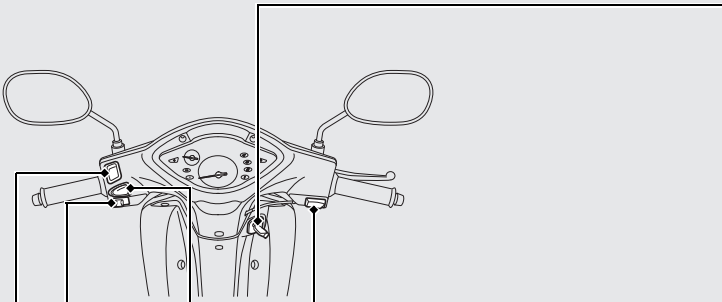

Start button

Horn button

Turn signal switch

▶ Pressing the switch turns the turn signal off.

Headlight dimmer switch

- ≣D : High beam
- ≣D : Low beam

Ignition Switch

Switches the electrical system on/off, locks the steering.

▶ Key can be removed when in the OFF or LOCK position.

Steering Lock

Lock the steering when parking to help prevent theft.
An U-shaped wheel lock or similar device is also recommended.

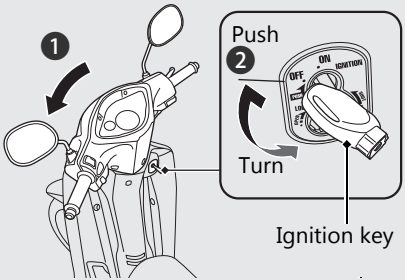

ON
Turns electrical system on for starting/riding.

OFF
Turns engine off.

LOCK
Locks steering.

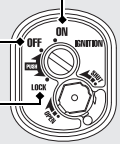

Locking

1. Turn the handlebar all the way to the left or right.
2. Push the key down, and turn the ignition switch to the LOCK position.
   ▶ Jiggle the handlebar if the lock is difficult to engage.
3. Remove the key.

Unlocking

Insert the key, push it in, and turn the ignition switch to the OFF position.

Switches *(Continued)*

Shutter

The ignition switch for this motorcycle is equipped with a shutter. After parking the motorcycle, close the shutter for theft prevention.

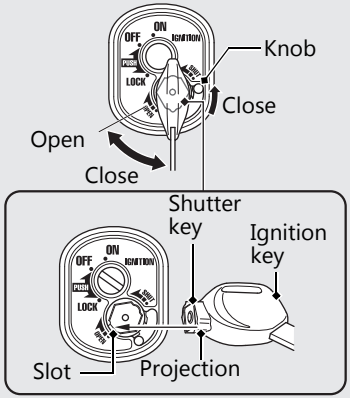

Close

1. Remove the ignition key from the ignition switch.
2. Align the projection of the shutter key with the slot of the shutter, and turn the shutter key counterclockwise.
   ▶ You can also close the shutter by moving the knob upward without the shutter key.
3. Remove the key.

Open

Align the projection of the shutter key with the slot of the shutter, and turn the shutter key clockwise.

Fuel Valve

The two-way fuel valve is used to control the flow of fuel from the fuel tank to the carburetor.

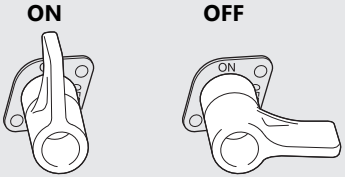

ON: normal position for riding.
OFF: for parking, storing, or transportation.

Starting the Engine

Start your engine using the following procedure.

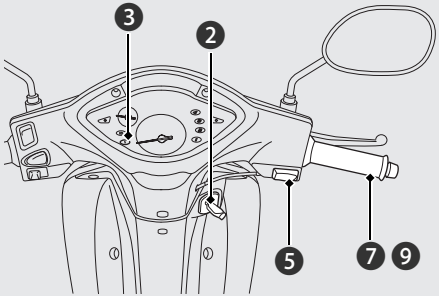

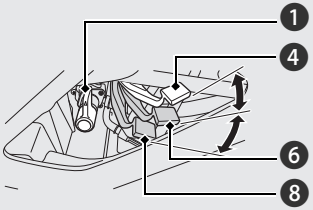

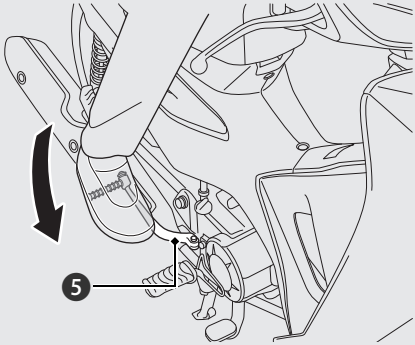

To restart a warm engine, follow the procedure for "High Air Temperature."

NOTICE

- If the engine does not start within 5 seconds, turn the ignition switch to the OFF position and wait 10 seconds before trying to start the engine again to recover battery voltage.
- Extended fast idling and revving the engine can damage the engine, and the exhaust system.

Normal Air Temperature 10 - 35ºC (50 - 95ºF):

1. Make sure the fuel valve is in the ON position.
2. Turn the ignition switch to the ON position.
3. Shift the transmission to Neutral (N indicator comes on).
4. Pull the choke lever up all the way to fully ON.
5. **Using the start button**
   With the throttle slightly open, press the start button.
   Using the kickstarter
   Lightly depress the kickstarter until resistance is felt.
   Then let the kickstarter return to the top of its stroke.
   With the throttle slightly open, operate the kickstarter. Kick from the top of the stroke through to the bottom with a rapid, continuous motion.
6. Immediately after the engine starts, push the choke lever down to the halfway position.
7. Warm up the engine by opening and closing the throttle slightly.
8. About a quarter minute after the engine starts, push the choke lever down all the way to fully OFF.
9. If idling is unstable, open the throttle slightly.

Starting the Engine *(Continued)*

High Air Temperature 35°C (95°F) or above :

① Do not use the choke.

② **Using the start button**

With the throttle slightly open, press the start button.

Using the kickstarter

Lightly depress the kickstarter until resistance is felt.

Then let the kickstarter return to the top of its stroke.

With the throttle slightly open, operate the kickstarter. Kick from the top of the stroke through to the bottom with a rapid, continuous motion.

Low Air Temperature 10°C (50°F) or below :

① Follow steps 1- 6 under "Normal Air Temperature."

② Warm up the engine by opening and closing the throttle slightly.

③ Continue warming up the engine until it runs smoothly and responds to the throttle when the choke lever is at fully OFF.

If the engine does not start:

① Turn the ignition switch to the OFF position.

② Push the choke lever down all the way to fully OFF.

③ Open the throttle fully.

④ Crank the engine several times with the kickstarter.

⑤ Follow steps 1-2 under "High Air Temperature."

If Engine Will Not Start P. 78

Shifting Gears

Your motorcycle transmission has four forward gears.
The gearshift operation differs when stopping and when moving.
When stopping, change can be made from 4th to neutral directly with the 4-step rotary system.
When moving, the forward 4-step return system is used.
Change cannot be made from 4th to neutral directly.

- ▶ Always return the throttle grip first before changing gear.
- ▶ Operate lightly with the tips of your toes until the shift lever is pushed down.
- ▶ Avoid changing gear needlessly and riding with your foot on the shift lever since this may damage the gear change mechanism and clutch mechanism.

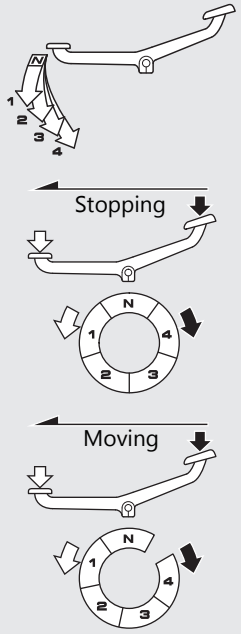

continued

Shifting Gears *(Continued)*

Proper shifting can prevent damaging the engine and transmission.

Upshifting

The upper limit speed of each gear is shown in gear range. ➡P. 18

Upshift to a higher gear before exceeding the upper limit speed.
Upshifting at speeds higher than the upper limit speed can cause damage to the engine.

Downshifting

Downshifting at speeds higher than those in the table below may overrev the engine and can cause damage to the engine and transmission.
Follow the table below when downshifting the gears.

Downshifting	Acceptable Speed
From 4th to 3rd	80 km/h or less
From 3rd to 2nd	55 km/h or less
From 2nd to 1st	30 km/h or less

Refuelling

Fuel type: Unleaded petrol only
Fuel octane number: Your motorcycle is designed to use Research Octane Number (RON) 91 or higher.
Tank capacity: 3.7 litres (0.98 US gal, 0.81 Imp gal)

Refuelling and Fuel Guidelines P. 9

Opening the Fuel Fill Cap

1. Open the seat. P. 31
2. Turn the fuel fill cap counterclockwise until it stops and remove the cap.

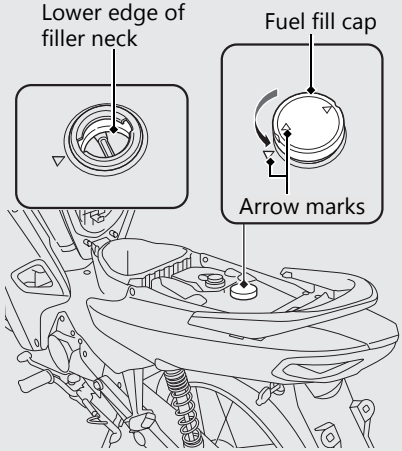

Do not fill with fuel above the lower edge of the filler neck.

Refuelling *(Continued)*

Closing the Fuel Fill Cap

(1) Install and tighten the fuel fill cap firmly by turning it clockwise.
   ▶ Make sure that the arrow marks on the cap and fuel tank is aligned.

(2) Close the seat.

⚠WARNING

Petrol is highly flammable and explosive. You can be burned or seriously injured when handling fuel.

- Stop the engine, and keep heat, sparks, and flame away.
- Handle fuel only outdoors.
- Wipe up spills immediately.

Storage Equipment

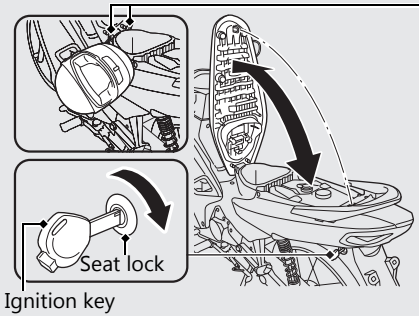

Seat Open
Insert the ignition key into the seat lock and turn it clockwise to unlock.

Seat Close
Close and push down on the rear of the seat until it locks. Make sure that the seat is locked securely to pull it up lightly.

Helmet holders
The helmet holders are located under the seat.

▶ Use the helmet holders only when parked.

⚠WARNING

Riding with a helmet attached to the holder can interfere with your ability to safely operate the motorcycle and could lead to a crash in which you can be seriously hurt or killed.

Use the helmet holder only while parked. Do not ride with a helmet secured by the holder.

Storage Equipment *(Continued)*

Luggage Box

Never exceed the maximum weight limit.

Maximum Weight: 5 kg (11 lb)

- ▶ Do not store any items that are flammable or susceptible to heat damage.
- ▶ Do not store valuables or fragile articles.

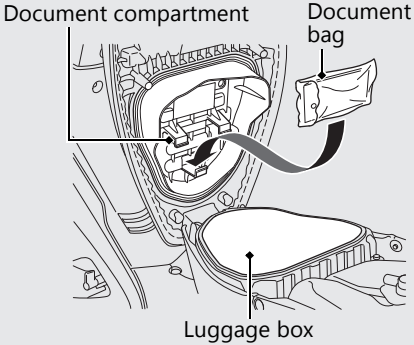

Document Bag

The document bag is in the document compartment in the reverse side of the seat.

Tool

The tools are in the luggage box.

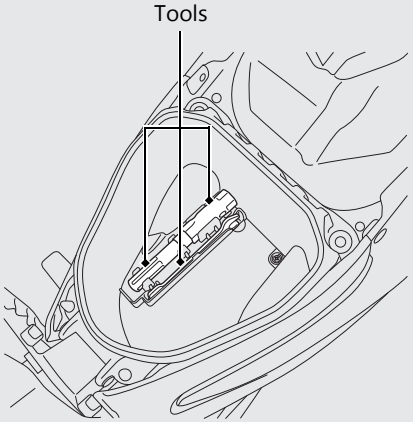

Maintenance

Please read “Importance of Maintenance” and “Maintenance Fundamentals” carefully before attempting any maintenance. Refer to “Specifications” for service data.

Importance of Maintenance.....P. 34
Maintenance Schedule.....P. 35
Maintenance Fundamentals.....P. 38
Tool.....P. 49
Removing & Installing Body Components...P. 50
Battery.....P. 50
Headlight Case.....P. 52
Spark Plug.....P. 54
Engine Oil.....P. 56
Brakes.....P. 59
Side Stand.....P. 68
Drive Chain.....P. 69
Throttle.....P. 74
Crankcase Breather.....P. 75
Other Adjustments.....P. 76
Headlight Aim.....P. 76

Importance of Maintenance

Keeping your motorcycle well-maintained is absolutely essential to your safety and to protect your investment, obtain maximum performance, avoid breakdowns, and reduce air pollution. Maintenance is the owner's responsibility. Be sure to inspect your motorcycle before each ride, and perform the periodic checks specified in the Maintenance Schedule. ➔P. 35

⚠WARNING

Improperly maintaining your motorcycle or failing to correct a problem before you ride can cause a crash in which you can be seriously hurt or killed.

Always follow the inspection and maintenance recommendations and schedules in this owner's manual.

Maintenance Safety

Always read the maintenance instructions before you begin each task, and make sure that you have the tools, parts, and skills required. We cannot warn you of every conceivable hazard that can arise in performing maintenance. Only you can decide whether or not you should perform a given task.

Follow these guidelines when performing maintenance.

- Stop the engine and remove the key.
- Place your motorcycle on a firm, level surface using the side stand, centre stand or a maintenance stand to provide support.
- Allow the engine, muffler, brakes, and other high-temperature parts to cool before servicing as you can get burned.
- Run the engine only when instructed, and do so in a well-ventilated area.

Maintenance Schedule

The maintenance schedule specifies the maintenance requirements necessary to ensure safe, dependable performance, and proper emission control.

Maintenance work should be performed in accordance with Honda's standards and specifications by properly trained and equipped technicians. Your dealer meets all of these requirements. Keep an accurate record of maintenance to help ensure that your motorcycle is properly maintained.
Make sure that whomever performs the maintenance completes this record.

All scheduled maintenance is considered a normal owner operating cost and will be charged to you by your dealer. Retain all receipts. If you sell the motorcycle, these receipts should be transferred with the motorcycle to the new owner.

Honda recommends that your dealer should road test your motorcycle after each periodic maintenance is carried out.

Maintenance Schedule

Items		Pre-ride Check ➔ P. 38	Frequency *1							Annual Check	Regular Replace	Refer to page
			× 1,000 km	1	6	12	18	24	30	36			
			× 1,000 mi	0.6	4	8	12	16	20	24			
Fuel Line	🔧				I	I	I	I	I	I	I		–
Fuel Level		I											–
Fuel Strainer Screen	🔧				C	C	C	C	C	C			–
Throttle Operation	🔧	I			I	I	I	I	I	I	I		74
Air Cleaner *2	🔧						R			R			48
Crankcase Breather *3					C	C	C	C	C	C			75
Spark Plug					I	R	I	R	I	R			54
Valve Clearance	🔧				I	I	I	I	I	I			–
Engine Oil		I		R	R	R	R	R	R	R	R		56
Engine Oil Strainer Screen	🔧					C		C		C			–
Engine Oil Centrifugal filter	🔧					C		C		C			–
Engine Idle Speed	🔧			I	I	I	I	I	I	I	I		–
Secondary Air Supply System	🔧						I			I			–

Maintenance Level

🔧 : Intermediate. We recommend service by your dealer, unless you have the necessary tools and are mechanically skilled. Procedures are provided in an official Honda Shop Manual.

🔧 : Technical. In the interest of safety, have your motorcycle serviced by your dealer.

Maintenance Legend

I : Inspect (clean, adjust, lubricate, or replace, if necessary)
R : Replace
C : Clean
L : Lubricate

Items		Pre-ride Check ➡ P. 38	Frequency *1 × 1,000 km	1	6	12	18	24	30	36	Annual Check	Regular Replace	Refer to page
			× 1,000 mi	0.6	4	8	12	16	20	24			
Secondary Air Supply Pair Filter *4								R				3 years	–
Drive Chain		I	Every 500 km (300 mi)					I	L				69
Brake Fluid (AFB110MS)*4		I			I	I	I	I	I	I	I	2 years	59
Brake Shoes Wear (AFB110MD)		I			I	I	I	I	I	I	I		66
Brake Shoes/Pads Wear (AFB110MS)		I			I	I	I	I	I	I	I		60, 66
Brake System		I		I	I	I	I	I	I	I	I		59
Brake Light Switch					I	I	I	I	I	I	I		67
Headlight Aim					I	I	I	I	I	I	I		76
Lights/Horn		I											–
Clutch System				I	I	I	I	I	I	I	I		–
Side Stand					I	I	I	I	I	I	I		68
Suspension					I	I	I	I	I	I	I		–
Nuts, Bolts, Fasteners				I		I		I		I	I		–
Wheels/Tyres		I			I	I	I	I	I	I	I		45
Steering Head Bearings						I		I		I	I		–

Notes:
*1 : At higher odometer reading, repeat at the frequency interval established here.
*2 : Service more frequently when riding in unusually wet or dusty areas.
*3 : Service more frequently when riding in rain or at full throttle.
*4 : Replacement requires mechanical skill.

Pre-ride Inspection

To ensure safety, it is your responsibility to perform a pre-ride inspection and make sure that any problem you find is corrected. A pre-ride inspection is a must, not only for safety, but because having a breakdown, or even a flat tyre, can be a major inconvenience.

Check the following items before you get on your motorcycle:

- Fuel level - Fill fuel tank when necessary. ➔P. 29
- Throttle - Check for smooth opening and full closing in all steering positions. ➔P. 74
- Engine oil level - Add engine oil if necessary. Check for leaks. ➔P. 56
- Drive chain - Check condition and slack, adjust and lubricate if necessary. ➔P. 69
- Brakes - Check operation;
  AFB110MD
  Front and Rear: check shoes wear (➔P. 66) and freeplay (➔P. 61, 63), adjust if necessary (➔P. 62, 64).
  AFB110MS
  Front: check brake fluid level and pad wear. ➔P. 59, 60
  Rear: check shoes wear (➔P. 66) and freeplay (➔P. 63), adjust if necessary (➔P. 64).
- Lights and horn - Check that lights, indicators and horn function properly.
- Wheels and tyres - Check condition, air pressure and adjust if necessary. ➔P. 45

Replacing Parts

Always use Honda Genuine Parts or their equivalents to ensure reliability and safety.

⚠WARNING

Installing non-Honda parts may make your motorcycle unsafe and cause a crash in which you can be seriously hurt or killed.

Always use Honda Genuine Parts or equivalents that have been designed and approved for your motorcycle.

Battery

Your motorcycle has a maintenance-free type battery. You do not have to check the battery electrolyte level or add distilled water. Clean the battery terminals if they become dirty or corroded.

Do not remove the battery cap seals. There is no need to remove the cap when charging.

NOTICE

Your battery is a maintenance-free type and can be permanently damaged if the cap strip is removed.

NOTICE

An improperly disposed of battery can be harmful to the environment and human health.

Always confirm local regulations for proper battery disposal instruction.

What to do in an emergency

If any of the following occur, immediately see your doctor.

- Electrolyte splashes into your eyes:
  - ▶ Wash your eyes repeatedly with cool water for at least 15 minutes. Using water under pressure can damage your eyes.
- Electrolyte splashes onto your skin:
  - ▶ Remove affected clothing and wash your skin thoroughly using water.
- Electrolyte splashes into your mouth:
  - ▶ Rinse mouth thoroughly with water, and do not swallow.

⚠WARNING

The battery gives off explosive hydrogen gas during normal operation.

A spark or flame can cause the battery to explode with enough force to kill or seriously hurt you.

Wear protective clothing and a face shield, or have a skilled mechanic do the battery servicing.

Cleaning the Battery Terminals

1. Remove the battery. ➡P. 50

2. If the terminals are starting to corrode and are coated with a white substance, wash with warm water and wipe clean.

3. If the terminals are heavily corroded, clean and polish the terminals with a wire brush or sandpaper. Wear safety glasses.

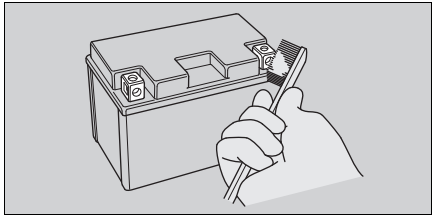

4. After cleaning, reinstall the battery.

The battery has a limited life span. Consult your dealer about when you should replace the battery. Always replace the battery with another maintenance-free battery of the same type.

NOTICE

Installing non-Honda electrical accessories can overload the electrical system, discharging the battery and possibly damaging the system.

Fuses

Fuses protect the electrical circuits on your motorcycle. If something electrical on your motorcycle stops working, check for and replace any blown fuses. ➡P. 91

Inspecting and Replacing Fuses

Turn the ignition switch to the OFF position to remove and inspect fuses. If a fuse is blown, replace with a fuse of the same rating. For fuse ratings, see "Specifications." ➡P. 105

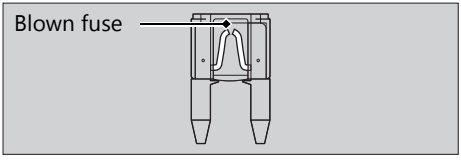

NOTICE

Replacing a fuse with one that has a higher rating greatly increases the chance of damage to the electrical system.

If a fuse fails repeatedly, you likely have an electrical fault. Have your motorcycle inspected by your dealer.

Engine Oil

Engine oil consumption varies and oil quality deteriorates according to riding conditions and time elapsed.
Check the engine oil level regularly, and add the recommended engine oil if necessary. Dirty oil or old oil should be changed as soon as possible.

Selecting the Engine Oil

For recommended engine oil, see "Specifications." P. 104

If you use non-Honda engine oil, check the label to make sure that the oil satisfies all of the following standards:

- JASO T 903 standard*1: MA
- SAE standard*2: 10W-30
- API classification*3: SG or higher

*1. The JASO T 903 standard is an index for engine oils for 4-stroke motorcycle engines. There are two classes: MA and MB. For example, the following label shows the MA classification.

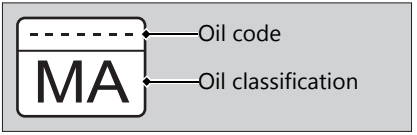

*2. The SAE standard grades oils by their viscosity.

*3. The API classification specifies the quality and performance rating of engine oils. Use SG or higher oils, excluding oils marked as "Energy Conserving" or "Resource Conserving" on the circular API service symbol.

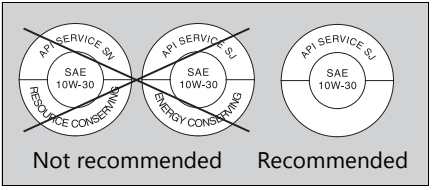

Brake Fluid

AFB110MS

Do not add or replace brake fluid, except in an emergency. Use only fresh brake fluid from a sealed container. If you do add fluid, have the brake system serviced by your dealer as soon as possible.

NOTICE

Brake fluid can damage plastic and painted surfaces. Wipe up spills immediately and wash thoroughly.

Recommended brake fluid:

Honda DOT 3 or DOT 4 Brake Fluid or equivalent

Drive Chain

The drive chain must be inspected and lubricated regularly. Inspect the chain more frequently if you often ride on bad roads, ride at high speed, or ride with repeated fast acceleration. ➡P. 69

If the chain does not move smoothly, makes strange noises, has damaged rollers, has loose pins, or kinks, have the chain inspected by your dealer.

Also inspect the drive sprocket and driven sprocket. If either has worn or damaged teeth, have the sprocket replaced by your dealer.

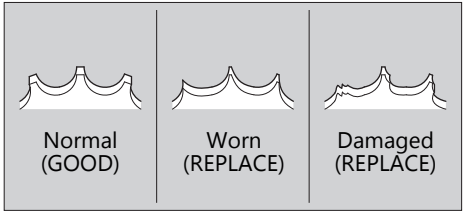

NOTICE

Use of a new chain with worn sprockets will cause rapid chain wear.

Cleaning and Lubricating

After inspecting the slack, clean the chain and sprockets while rotating the rear wheel.
Use a dry cloth with high flash-point solvent.
Use a soft brush if the chain is dirty.
After cleaning, wipe dry and lubricate with the recommended lubricant.

Recommended lubricant:
Drive chain lubricant.
If not available, use SAE 80 or 90 gear oil.

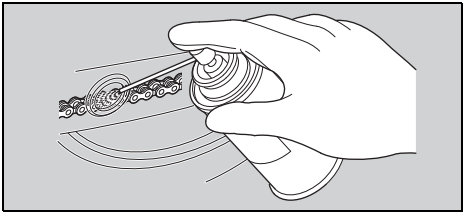

Never use petrol or low flash point solvents for cleaning the drive chain.
A fire or explosion could result.
Avoid getting lubricant on the brakes or tyres.
Avoid applying excess chain lubricant to prevent spray onto your clothes and the motorcycle.

Crankcase Breather

Service more frequently when riding in rain, at full throttle, or after the motorcycle is washed or overturned. Service if the deposit level can be seen in the transparent section of the drain tube.

If the drain tube overflows, the air filter may become contaminated with engine oil causing poor engine performance. ➡P. 75

Tyres (Inspecting/Replacing)

Checking the Air Pressure

Visually inspect your tyres and use an air pressure gauge to measure the air pressure at least once a month or any time you think the tyres look low. Always check air pressure when your tyres are cold.

Inspecting for Damage

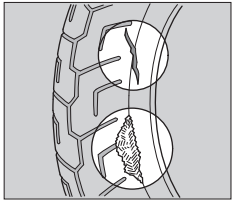

Inspect the tyres for cuts, slits, or cracks that exposes fabric or cords, or nails or other foreign objects embedded in the side of the tyre or the tread. Also inspect for any unusual bumps or bulges in the side walls of the tyres.

Inspecting for Abnormal Wear

Inspect the tyres for signs of abnormal wear on the contact surface.

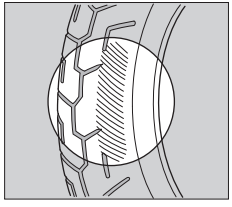

Inspecting Tread Depth

Inspect the tread wear indicators. If they become visible, replace the tyres immediately.

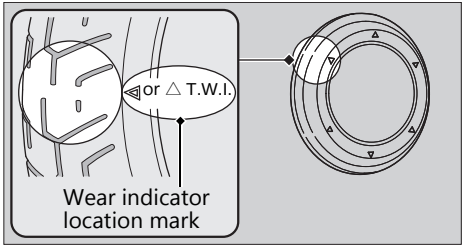

⚠WARNING

Riding on tyres that are excessively worn or improperly inflated can cause a crash in which you can be seriously hurt or killed.

Follow all instructions in this owner's manual regarding tyre inflation and maintenance.

Have your tyres replaced by your dealer.
For recommended tyres and air pressure, see "Specifications." ➔P. 104
Follow these guidelines whenever you replace tyres.

- Use the recommended tyres or equivalents of the same size, construction, speed rating, and load range.
- Remember to replace the inner tube whenever you replace a tyre. The old tube will probably be stretched, and it could fail if installed in a new tyre.

⚠WARNING

Installing improper tyres on your motorcycle can adversely affect handling and stability, and can cause a crash in which you can be seriously hurt or killed.

Always use the size and type of tyres recommended in this owner's manual.

Air Cleaner

This motorcycle is equipped with a viscous type air cleaner element.
Air blow cleaning or any other cleaning can degrade the viscous element performance and cause the intake of dust.
Do not perform the maintenance.
Should be serviced by your dealer.

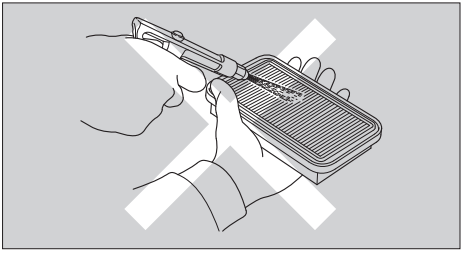

Tool

The tools are stored in the luggage box.
➔P. 32

You can perform some roadside repairs, minor adjustments and parts replacement with the tools contained in the kit.

- 10 × 14 mm Open end wrench
- Standard/Phillips screwdriver
- Screwdriver handle
- Spark plug wrench

Battery

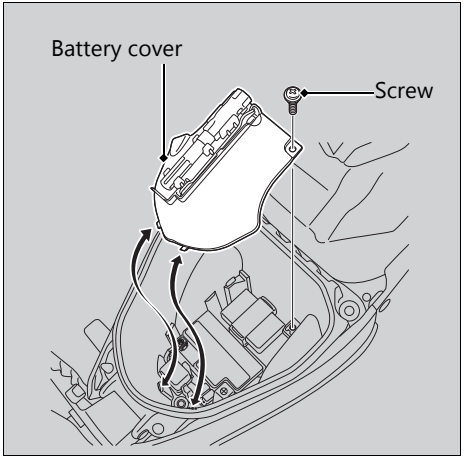
Battery cover
Screw

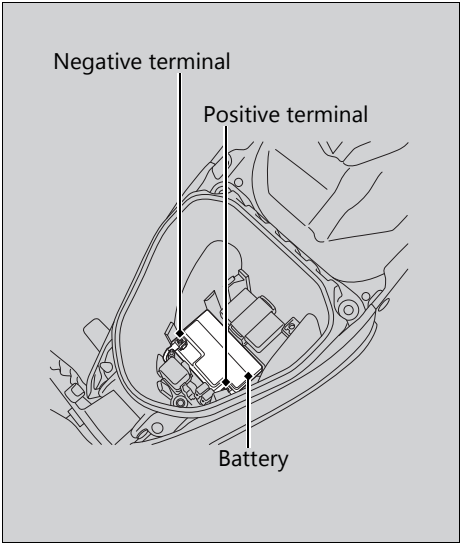
Negative terminal
Positive terminal
Battery

Removal

Make sure the ignition switch is in the OFF position.

1. Open the seat. P. 31
2. Remove the battery cover by removing the screw.
3. Disconnect the negative ⊖ terminal from the battery.
4. Disconnect the positive ⊕ terminal from the battery.
5. Remove the battery taking care not to drop the terminal nuts.

Installation

Install the parts in the reverse order of removal. Always connect the positive ⊕ terminal first. Make sure that bolts and nuts are tight.

For proper handling of the battery, see
"Maintenance Fundamentals." P. 39
"Battery Goes Dead." P. 86

Headlight Case

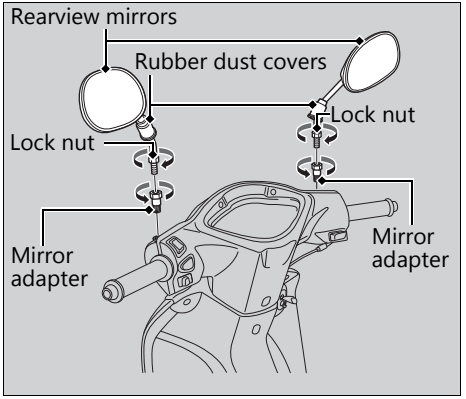

Removal

1. Pull up the rubber dust covers.
2. Loosen the lock nuts by turning clockwise.
3. Loosen the rearview mirrors and remove them by turning them clockwise until they will no longer turn.
4. Loosen the mirror adapters by turning counterclockwise and remove them.

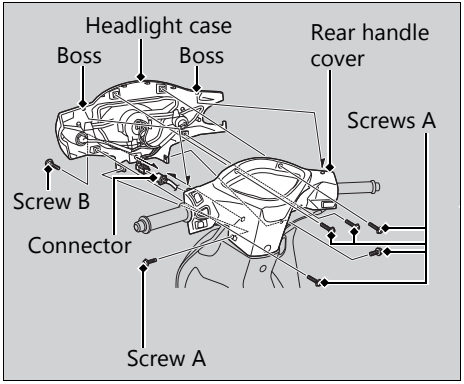

5. Remove the screws A and screw B.
6. Release the bosses by pressing the rear handle cover.
7. Remove the headlight case and disconnect the connector.

Installation

Install the parts in the reverse order of removal.

▶ To install the rearview mirrors.

1. Install the mirror adapters.
2. Install the rearview mirrors by turning counterclockwise until they will no longer turn.
3. Loosen the rearview mirrors approximately 2 turns.
4. Adjust the rearview mirrors.
5. Tighten the lock nuts and install the rubber dust covers.

Checking Spark Plug

For the recommended spark plug, see "Specifications." P. 104

Use only the recommended type of spark plug in the recommended heat range.

NOTICE

Using a spark plug with an improper heat range can cause engine damage.

1. Disconnect the spark plug cap from the spark plug.
2. Clean any dirt from around the spark plug base.
3. Remove the spark plug using provided spark plug wrench (P. 49).

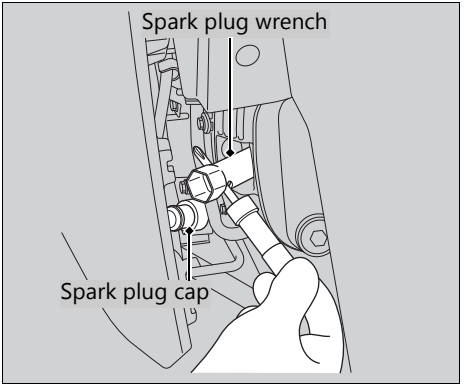

4. Inspect the electrodes and centre porcelain for deposits, erosion or carbon fouling.
   - ▶If the erosion or deposit is heavy, replace the plug.
   - ▶Clean a carbon or wet-fouled plug with a plug cleaner, otherwise use a wire brush.

5. Check the spark plug gap using a wire-type feeler gauge.
▶ If adjustment is necessary, bend the side electrode carefully.

The gap should be:
0.8 to 0.9 mm (0.03 to 0.04 in)

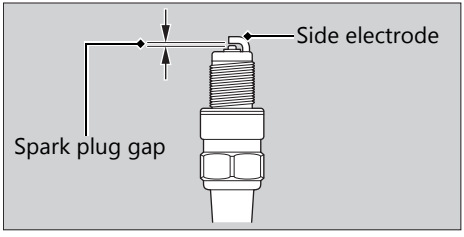

6. Make sure the plug washer is in good condition.

7. Install the spark plug. With the plug washer attached, thread the spark plug in by hand to prevent cross-threading.

8. Tighten the spark plug:
- If the old plug is good:
  NGK: 1/6 turn after it seats.
  DENSO: 1/8 turn after it seats.
- If installing a new plug, tighten it twice to prevent loosening:
  a) First, tighten the plug:
  NGK: 1/4 turn after it seats.
  DENSO: 3/4 turn after it seats.
  b) Then loosen the plug.
  c) Next, tighten the plug again:
  NGK: 1/6 turn after it seats.
  DENSO: 1/8 turn after it seats.

NOTICE
An improperly tightened spark plug can damage the engine. If a plug is too loose, a piston may be damaged. If a plug is too tight, the threads may be damaged.

9. Install the parts in the reverse order of removal.
▶ When reinstalling the spark plug cap, take care to avoid pinching any cables or wires.

Checking the Engine Oil

1. If the engine is cold, idle the engine for 3 to 5 minutes.
2. Turn the ignition switch to the OFF position and wait for 2 to 3 minutes.
3. Place your motorcycle on its centre stand on a firm, level surface.
4. Remove the oil fill cap/dipstick, wipe it clean.
5. Insert the oil fill cap/dipstick until it seats, but don't screw it in.
6. Check that the oil level is between the upper level and lower level marks in the oil fill cap/dipstick.
7. Securely install the oil fill cap/dipstick.

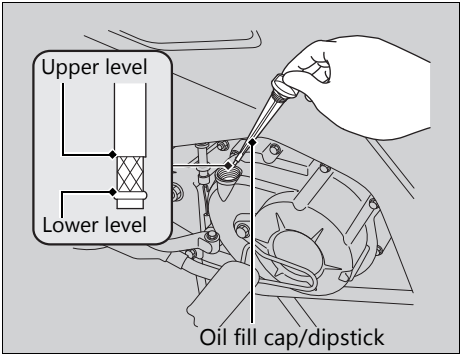

Adding Engine Oil

If the engine oil is below or near the lower level mark, add the recommended engine oil.
P. 42, 104

1. Remove the oil fill cap/dipstick. Add the recommended oil until it reaches the upper level mark.
- ▶ Place your motorcycle on its centre stand on a firm, level surface when checking the oil level.
- ▶ Do not overfill above the upper level mark.
- ▶ Make sure no foreign objects enter the oil filler opening.
- ▶ Wipe up any spills immediately.

2. Securely reinstall the oil fill cap/dipstick.

NOTICE

Overfilling with oil or operating with insufficient oil can cause damage to your engine. Do not mix different brands and grades of oil. They may affect lubrication and clutch operation.

For the recommended oil and oil selection guidelines, see "Maintenance Fundamentals."
P. 42

Changing Engine Oil

Changing the oil requires special tools. We recommend that you have your motorcycle serviced by your dealer.

1. If the engine is cold, idle the engine for 3 to 5 minutes.

2. Turn the ignition switch to the OFF position and wait for 2 to 3 minutes.

3. Place your motorcycle on its centre stand on a firm, level surface.
4. Place a drain pan under the drain bolt.
5. Remove the oil fill cap/dipstick, drain bolt, and sealing washer to drain the oil.
▶Discard the oil at an approved recycling centre.

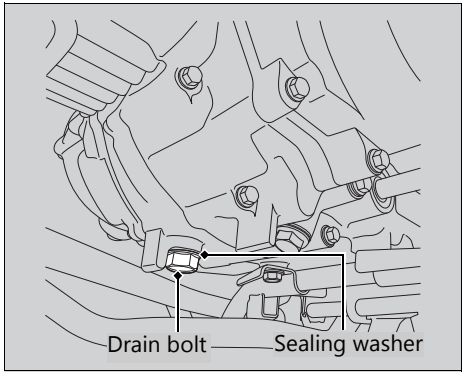

6. Install a new sealing washer onto the drain bolt. Tighten the drain bolt.

Torque: 24 N·m (2.4 kgf·m, 18 lbf·ft)

7. Fill the crankcase with the recommended oil (➡P. 42, 104) and install the oil fill cap/dipstick.

Required oil
When changing oil:
0.8 litres (0.8 US qt, 0.7 Imp qt)

8. Check the oil level. ➡P. 56
9. Check that there are no oil leaks.

Checking the Front Brake Fluid

AFB110MS

1. Place your motorcycle in an upright position on a firm, level surface.
2. Check that the brake fluid reservoir is horizontal and that the fluid level is above the LOWER level mark.

If the brake fluid level in the reservoir is below the LOWER level mark or the brake lever freeplay becomes excessive, inspect the brake pads for wear. If the brake pads are not worn, you most likely have a leak. Have your motorcycle inspected by your dealer.

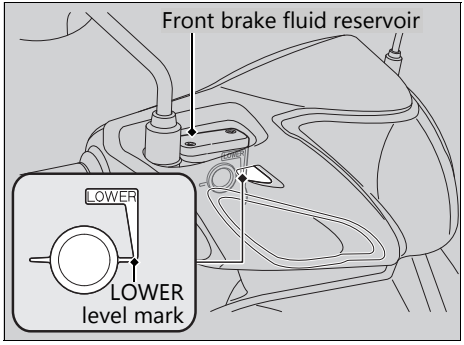

Inspecting the Front Brake Pads

AFB110MS

Check the condition of the brake pad wear indicators.
The pads need to be replaced if a brake pad is worn to the indicator.

1. Inspect the brake pads from below the brake caliper.

If necessary have the pads replaced by your dealer.
Always replace both left and right brake pads at the same time.

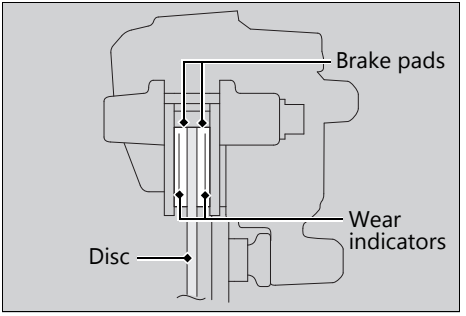

Inspecting the Front Brake Lever Freeplay

AFB110MD

1. Place your motorcycle on its centre stand on a firm, level surface.
2. Measure the distance of the front brake lever before the starts to take hold.

Freeplay at the tip of the brake lever: 10 to 20 mm (0.4 to 0.8 in)

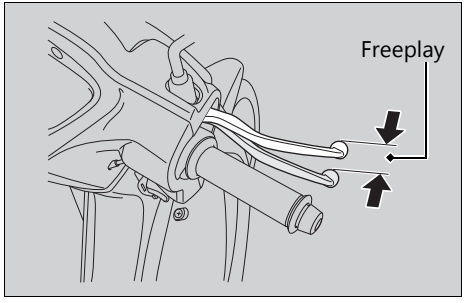

Check the brake cable for kinks or signs of wear. If necessary have it replaced by your dealer.

Lubricate the brake cable with a commercially available cable lubricant to prevent premature wear and corrosion.

Make sure the brake arm, spring and fastener are in good condition.

Adjusting the Front Brake Lever Freeplay

AFB110MD

Adjust the freeplay of the brake lever with the front wheel pointed straight ahead.
Make sure the cut-out on the adjusting nut is seated on the brake arm pin when adjusting the freeplay.

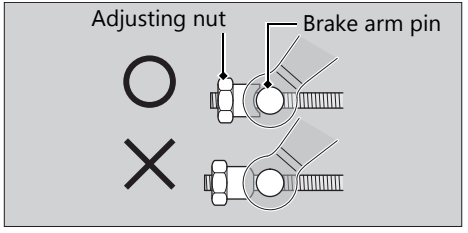

If proper adjustment cannot be obtained by this method, see your dealer.

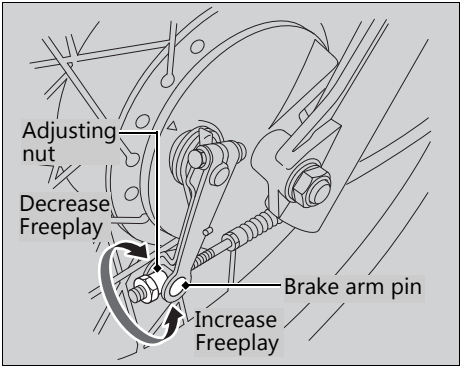

1. Adjust by turning the front brake adjusting nut a half-turn at a time.
2. Apply the brake several times and check for free wheel rotation after the brake lever is released.
3. Push the brake arm to confirm that there is a gap between the front brake adjusting nut and brake arm pin.

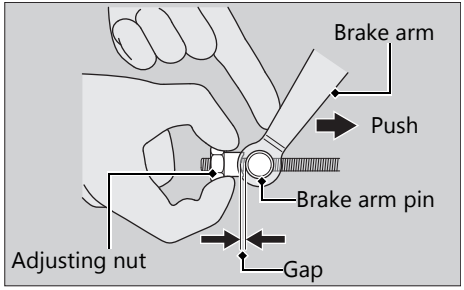

After adjustment, confirm the freeplay of the brake lever.
Make sure the brake arm, spring and fastener are in good condition.

NOTICE
Do not turn the adjuster beyond its natural limits.

Inspecting the Rear Brake Pedal Freeplay

1. Place your motorcycle on its centre stand on a firm, level surface.
2. Measure the distance of the rear brake pedal before the starts to take hold.

Freeplay at the tip of the brake pedal: 20 to 30 mm (0.8 to 1.2 in)

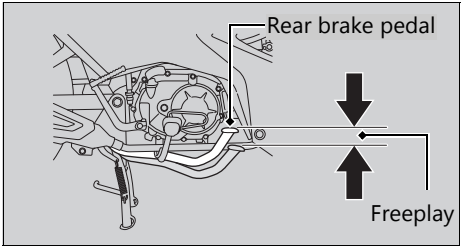

Make sure the brake rod, brake arm, spring and fastener are in good condition.

Adjusting the Rear Brake Pedal Freeplay

Make sure the cut-out on the adjusting nut is seated on the brake arm pin when adjusting the freeplay.

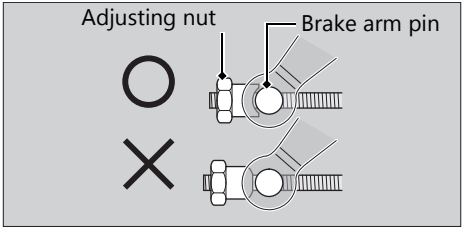

If proper adjustment cannot be obtained by this method, see your dealer.

1. Adjust by turning the rear brake adjusting nut a half-turn at a time.

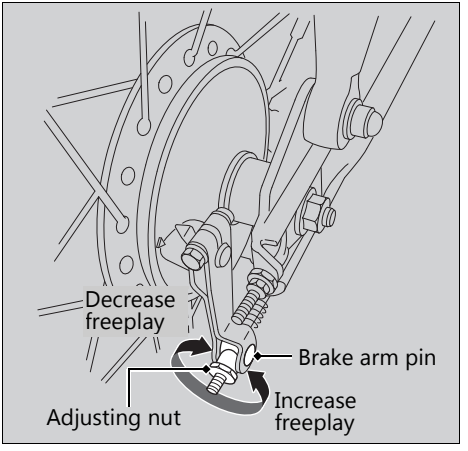

2. Apply the brake several times and check for free wheel rotation after the brake pedal is released.

3. Push the brake arm to confirm that there is a gap between the rear brake adjusting nut and brake arm pin.

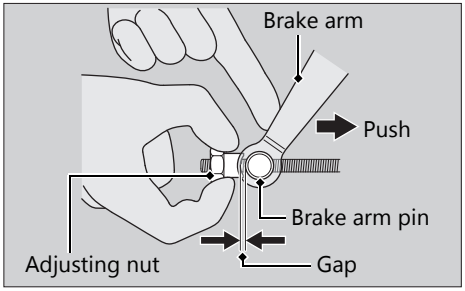

After adjustment, confirm the freeplay of the rear brake pedal.

Make sure the brake rod, brake arm, spring and fastener are in good condition.

NOTICE

Do not turn the adjuster beyond its natural limits.

Inspecting the Brake Shoe Wear

AFB110MS

The rear brake is equipped with a brake wear indicator.

AFB110MD

The front and rear brake are equipped with a brake wear indicator.

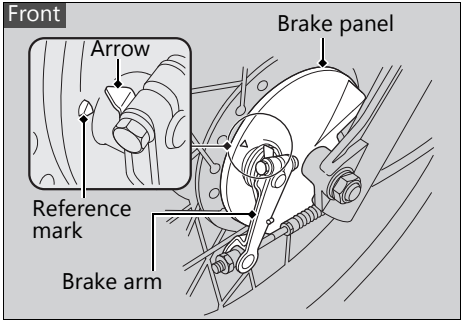

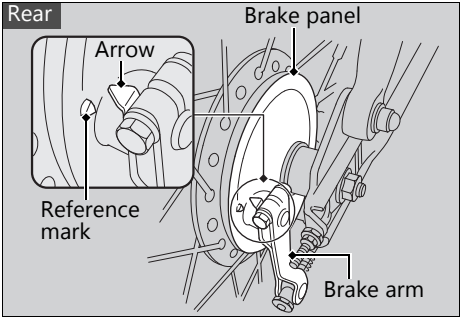

When the brake is applied, an arrow attached to the brake arm moves toward a reference mark on the brake panel. If the arrow aligns with the reference mark on full application of the brake, the brake shoes must be replaced. See your dealer for this service.

When the brake service is necessary, see your dealer. Use only Honda Genuine Parts or its equivalent.

Adjusting the Brakelight Switch

Check the operation of the brakelight switch. Hold the brakelight switch and turn the adjusting nut in the direction A if the switch operates too late, or turn the nut in the direction B if the switch operates too soon.

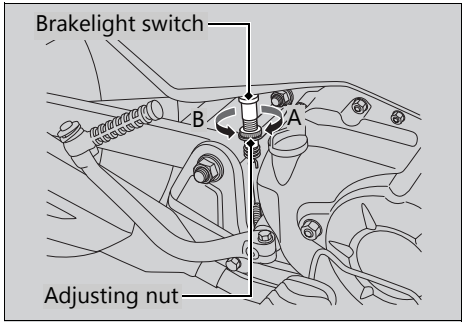

Checking the Side Stand

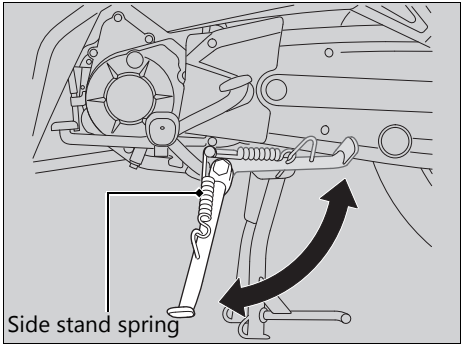

1. Check that the side stand operates smoothly. If the side stand is stiff or squeaky, clean the pivot area and lubricate the pivot bolt with clean grease.
2. Check the spring for damage or loss of tension.

Inspecting the Drive Chain Slack

Check the drive chain slack at several points along the chain. If the slack is not constant at all points, some links may be kinked and binding.
Have the chain inspected by your dealer.

1. Shift the transmission to Neutral. Stop the engine.
2. Place your motorcycle on its centre stand on a firm, level surface.

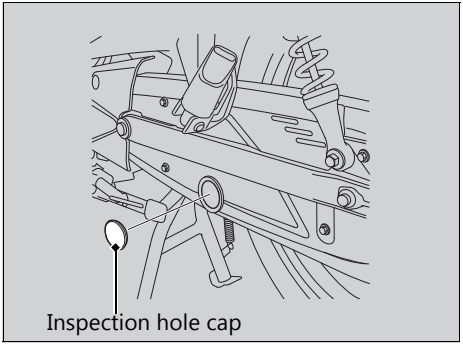

3. Remove the inspection hole cap.

4. Move the drive chain up and down with your finger.

Drive chain slack:
25 to 35 mm (1.0 to 1.4 in)

▶ Do not ride your motorcycle if the slack exceeds 50 mm (2.0 in).

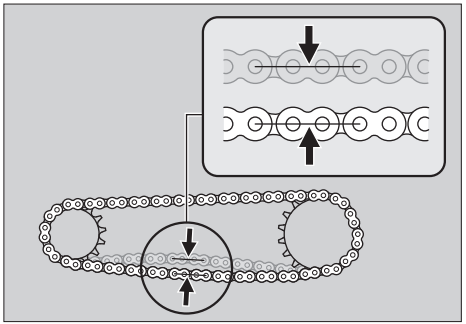

5. Rotate the rear wheel and check that the chain moves smoothly.

6. Remove the chain covers by removing the bolts.

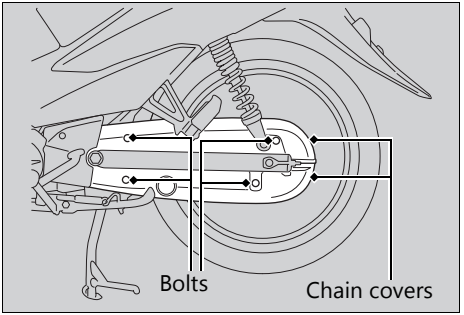

7. Inspect the sprockets. ➡ P. 43

8. Clean and lubricate the drive chain. ➡ P. 44

9. Install the parts in the reverse order of removal.

10. Install the chain covers and tighten the bolts.

Torque: 7 N·m (0.7 kgf·m, 5.2 lbf·ft)

Adjusting the Drive Chain Slack

Adjusting the chain requires special tools. Have the drive chain slack adjusted by your dealer.

1. Shift the transmission to Neutral. Stop the engine.
2. Place your motorcycle on its centre stand on a firm, level surface.
3. Remove the inspection hole cap. P. 69
4. Loosen the rear axle nut.
5. Loosen the lock nuts on both sides of the drive chain adjusters.

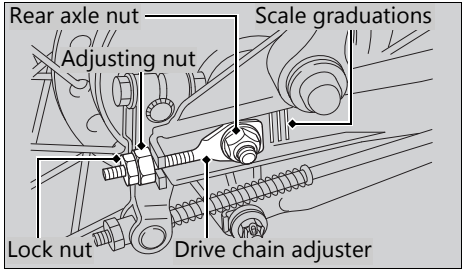

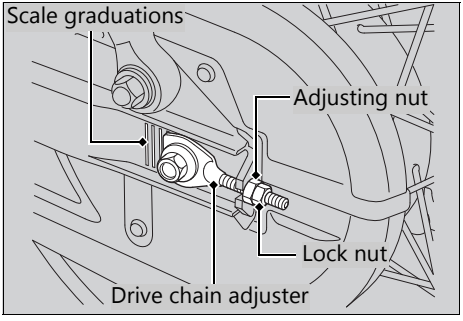

6. Turn both adjusting nuts an equal number of turns until the correct drive chain slack is obtained. Turn the adjusting nuts clockwise to tighten the chain. Turn the adjusting nuts counterclockwise and push the rear wheel toward the front to provide more slack.

continued

Adjust the slack at a point midway between the drive sprocket and the driven sprocket.
Check the drive chain slack. P. 70

7. Check rear axle alignment by making sure the end of the drive chain adjuster aligns with the scale graduations on both sides of the swingarm.
Both marks should correspond. If the axle is misaligned, turn the right or left adjusting nut until the marks are aligned and recheck chain slack.

8. Tighten the rear axle nut.

Torque: 59 N·m (6.0 kgf·m, 44 lbf·ft)

9. Hold the adjusting nuts and tighten the lock nuts.

10. Recheck drive chain slack.

11. Rear brake pedal freeplay is affected when repositioning the rear wheel to adjust drive chain slack. Check rear brake pedal freeplay and adjust as necessary. P. 63

12. Reinstall the inspection hole cap.

If a torque wrench was not used for installation, see your dealer as soon as possible to verify proper assembly.

Improper assembly may lead to loss of braking capacity.

Checking the Drive Chain Wear

If the drive chain slack is excessive when the rear axle is moved to the furthest limit of adjustment, the drive chain is worn and must be replaced.

Chain:
DID420AD
RK420SL
KMC420JB

If necessary have the drive chain replaced by your dealer.

Checking the Throttle

With the engine off, check that the throttle rotates smoothly from fully closed to fully open in all steering positions and throttle freeplay is correct. If the throttle does not move smoothly, close automatically, or if the cable is damaged, have the motorcycle inspected by your dealer.

Freeplay at the throttle grip flange:
2 to 6 mm (0.1 to 0.2 in).

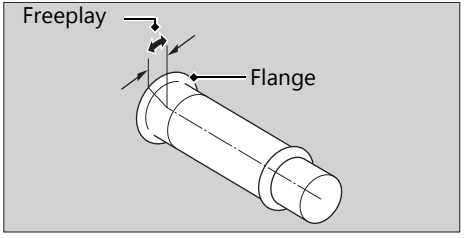

Cleaning the Crankcase Breather

1. Place a suitable container under the crankcase breather tube.
2. Remove the crankcase breather tube and drain deposits.
3. Reinstall the crankcase breather tube.

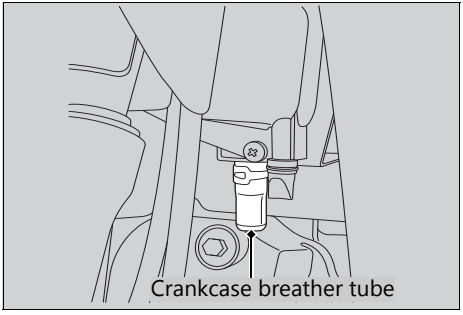

Adjusting the Headlight Aim

You can adjust vertical aim of the headlight for proper alignment. To move the headlight, loosen the adjusting bolt.
Tighten the adjusting bolt after adjustment.
Obey local laws and regulations.

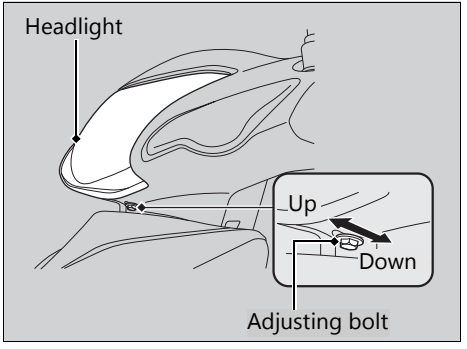

Troubleshooting

Engine Will Not Start ..... P. 78
Tyre Puncture ..... P. 79
Tube Repair and Replacement ..... P. 79
Electrical Trouble ..... P. 86
Battery Goes Dead ..... P. 86
Burned-out Light Bulb ..... P. 86
Blown Fuse ..... P. 91

Starter Motor Operates But Engine Does Not Start

Check the following items:

- Check the correct engine starting sequence ➔P. 24
- Check that there is petrol in the fuel tank

Starter Motor Does Not Operate

Check the following items:

- Check the correct engine starting sequence. ➔P. 24
- Check for a blown fuse ➔P. 91
- Check for a loose battery connection or battery terminal corrosion ➔P. 39
- Check the condition of the battery ➔P. 86

If the problem continues, have your motorcycle inspected by your dealer.

Repairing a puncture or removing a wheel requires special tools and technical expertise. We recommend you have this type of service performed by your dealer.
After an emergency repair, always have the tyre inspected/replaced by your dealer.

Tube Repair and Replacement

If a tube is punctured or damaged, you should replace it as soon as possible. A tube that is repaired may not have the same reliability as a new one, and it may fail while you are riding. If you need to make a temporary repair by patching a tube or using an aerosol sealant, ride cautiously at reduced speed and have the tube replaced before you ride again. Anytime a tube is replaced, the tyre should be carefully inspected as described.

⚠WARNING

Riding your motorcycle with a temporary tyre or tube repair can be risky. If the temporary repair fails, you can crash and be seriously injured or killed.

If you must ride with a temporary tyre or tube repair, ride slowly and carefully and do not exceed 50 km/h (30 mph) until the tyre or tube is replaced.

Removing Wheels

Follow these procedures if you need to remove a wheel in order to repair a puncture.

Front Wheel

AFB110MS

Removal

1. Place your motorcycle on its centre stand on a firm, level surface.
2. Support your motorcycle securely and raise the front wheel off the ground using a maintenance stand or a hoist.
3. Remove the speedometer cable by pushing the tab.
4. Remove the front axle nut.
5. Remove the front axle shaft, front wheel, speedometer gearbox and side collar.
   - ▶Avoid getting grease, oil, or dirt on the disc or pad surfaces.
   - ▶Do not pull the brake lever while the front wheel is removed.

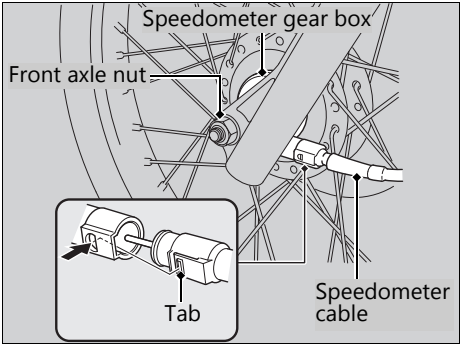

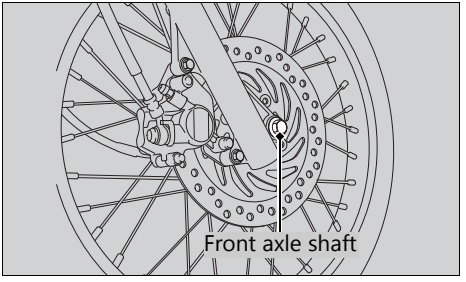

Installation

1. Attach the side collar and speedometer gearbox to the wheel.
2. Position the wheel between the fork legs and insert the front axle shaft from the right side, through the right fork leg and wheel hub.

NOTICE

When installing a wheel or caliper into original position, carefully fit the brake disc between the pads to avoid scratching them.

3. Make sure that the lug on the left fork leg is located in the slot of the speedometer gearbox.
4. Tighten the front axle nut.

Torque: 59 N·m (6.0 kgf·m, 44 lbf·ft)

5. After installing the wheel, apply the brake lever several times, then check if the wheel rotates freely. Recheck the wheel if the brake drags or if the wheel does not rotate freely.
6. Install the speedometer cable securely.

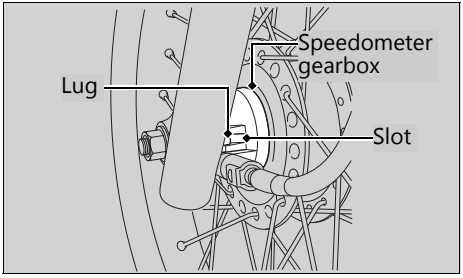

If a torque wrench was not used for installation, see your dealer as soon as possible to verify proper assembly.

Improper assembly may lead to loss of braking capacity.

Front Wheel

AFB110MD

Removal

1. Place your motorcycle on its centre stand on a firm, level surface.
2. Support your motorcycle securely and raise the front wheel off the ground using a maintenance stand or a hoist.
3. Remove the speedometer cable by pushing the tab.
4. Remove the front brake adjusting nut and disconnect the front brake cable from the brake arm.
5. Remove the front axle nut.
6. Remove the front axle shaft, front wheel, and side collar.

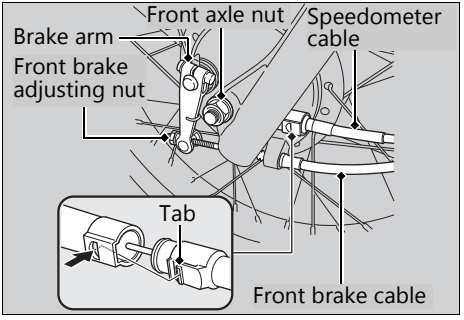

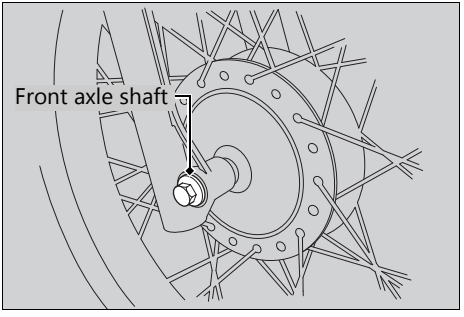

Installation

1. Attach the side collar to the wheel.
2. Position the wheel between the fork legs and insert the front axle shaft from the right side, through the right fork leg and wheel hub.
3. Make sure that the lug on the left fork leg is located in the slot of the brake panel.
4. Tighten the front axle nut.

Torque: 59 N·m (6.0 kgf·m, 44 lbf·ft)

5. Install the speedometer cable securely.
6. Install the front brake cable and front brake adjusting nut.
7. Adjust the front brake lever freeplay.
➡ P. 62
8. After installing the wheel, apply the brake lever several times and then check if the wheel rotates freely. Recheck the wheel if the brake drags or if the wheel does not rotate freely.

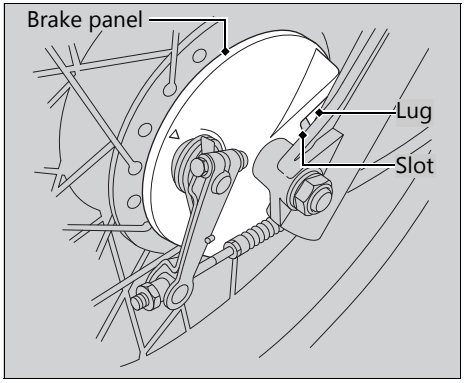

If a torque wrench was not used for installation, see your dealer as soon as possible to verify proper assembly.

Improper assembly may lead to loss of braking capacity.

Rear Wheel

Removal

1. Support your motorcycle securely and raise the rear wheel off the ground using a centre stand or a hoist.
2. Remove the chain covers. P. 70
3. Remove the rear brake adjusting nut.
4. Disconnect the brake rod from the brake arm.
5. Disconnect the brake stopper arm from the brake panel by removing the cotter pin, brake stopper arm nut, washer and rubber grommet.
6. Loosen the drive chain lock nuts and drive chain adjusting nuts on both sides of the swingarm.

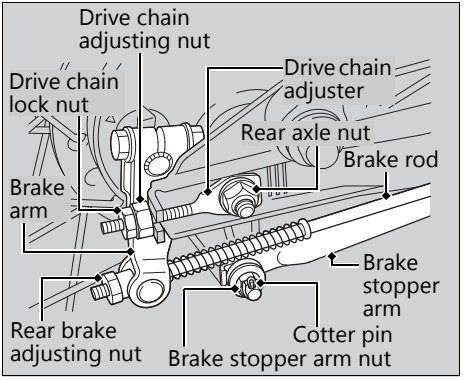

7. Remove the rear axle nut while holding the rear axle shaft at the other end with a wrench.
8. Remove the drive chain from the driven sprocket by pushing the rear wheel forward.

9. Remove the rear axle shaft, drive chain adjusters, side collars and rear wheel from the swingarm.

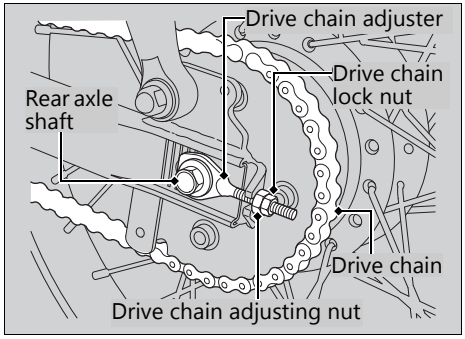

Installation

1. To install the rear wheel, reverse the removal procedure.

2. Reassemble the brake stopper arm and tighten the brake stopper arm nut.

Torque: 22 N·m (2.2 kgf·m, 16 lbf·ft)

3. Connect the brake rod to the brake arm.

4. Adjust the drive chain slack. ➡P. 71

5. Adjust the rear brake pedal freeplay. ➡P. 64

6. Tighten the rear axle nut.

Torque: 59 N·m (6.0 kgf·m, 44 lbf·ft)

7. After installing the wheel, apply the brake pedal several times, then check if the wheel rotates freely. Recheck the wheel if the brake drags or if the wheel does not rotate freely.

8. Install the chain covers. ➡P. 70

If a torque wrench was not used for installation, see your dealer as soon as possible to verify proper assembly.

Improper assembly may lead to loss of braking capacity.

A used cotter pin may not effectively secure a fastener. Always replace a used cotter pin with a new one.

Battery Goes Dead

Charge the battery using a motorcycle battery charger.
Remove the battery from the motorcycle before charging.
Do not use an automobile-type battery charger, as these can overheat a motorcycle battery and cause permanent damage.
If the battery does not recover after recharging, contact your dealer.

NOTICE
Jump starting using an automobile battery can damage your motorcycle's electrical system and is not recommended.
Bump starting is also not recommended.

Burned-out Light Bulb

Follow the procedure below to replace a burned-out light bulb.
Turn the ignition switch to the OFF or LOCK position.
Allow the bulb to cool before replacing it.
Do not use bulbs other than those specified.
Check the replacement bulb for correct operation before riding.

For the light bulb wattage, see "Specifications." ➔P. 105

Headlight Bulb

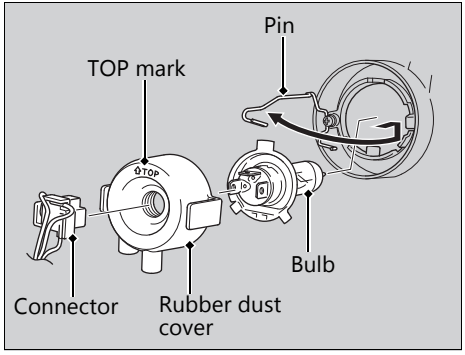

1. Remove the headlight case. ➡P. 52
2. Disconnect the connector.
3. Remove the rubber dust cover.
4. Slightly press down on the pin and turn it clockwise until it releases from the headlight bulb housing.
5. Remove the bulb.
6. Install a new bulb in the reverse order of removal.
   ▶Install the rubber dust cover with its TOP mark facing up.
7. Install the remaining parts in the reverse order of removal.

Do not touch the glass surface with your fingers. If you touch the bulb with your bare hands, clean it with a cloth moistened with alcohol.

continued

Brakelight/Taillight Bulb

1. Remove the brakelight/taillight lens by removing the screws and releasing the tabs.

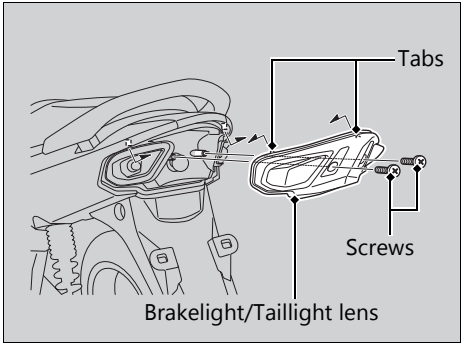

2. Remove the bulb by slightly pressing the bulb and turn it counterclockwise.

3. Install a new bulb in the reverse order of removal.

4. Install the remaining parts in the reverse order of removal.

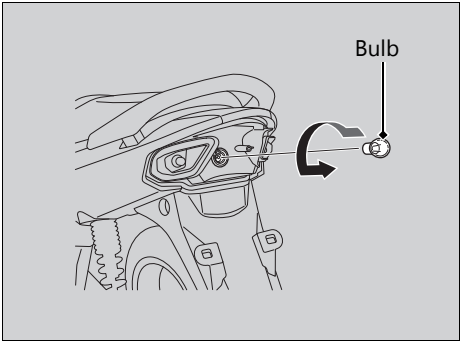

Front Turn Signal Bulb

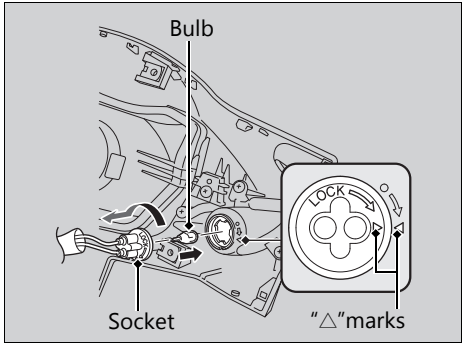

1. Remove the headlight case. P. 52
2. Turn the socket counterclockwise and pull it out.
3. Pull out the bulb without turning it.
4. Install a new bulb in the reverse order of removal.
   ▶Install the socket by turning it clockwise. Make sure that the "△" marks on the socket and front turn signal housing are aligned.
   ▶Use only the amber bulb.
5. Install the remaining parts in the reverse order of removal.

Rear Turn Signal Bulb

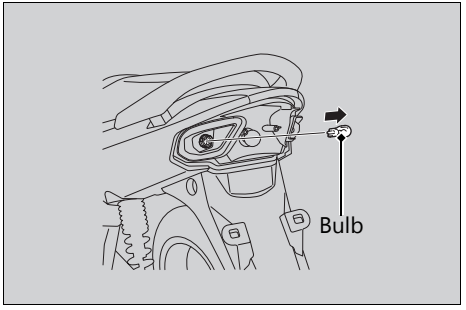

1. Remove the brakelight/taillight lens.
P. 88

2. Pull out the bulb without turning it.

3. Install a new bulb in the reverse order of removal.
▶Use only the amber bulb.

4. Install the remaining parts in the reverse order of removal.

Blown Fuse

Before handling fuses, see "Inspecting and Replacing Fuses." ➡P. 41

Fuse Box Fuses

1. Open the seat ➡P. 31
2. Remove the battery cover. ➡P. 50
3. Open the fuse box covers.
4. Pull out the fuses one by one to check for a blown fuse. Always replace a blown fuse with a spare fuse of the same rating.
   ▶ Spare fuses are located on reverse side of the battery cover.
5. Close the fuse box covers.
6. Install the battery cover.
7. Close the seat.

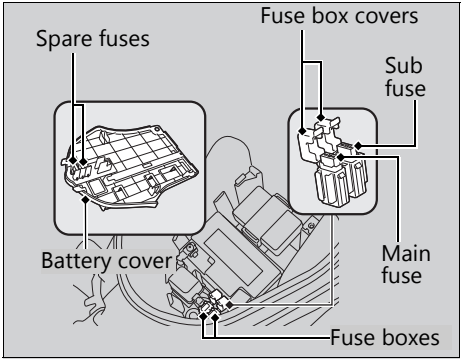

NOTICE

If a fuse fails repeatedly, you likely have an electrical problem. Have your motorcycle inspected by your dealer.

Information

Keys.....P. 93
Instruments, Controls, & Other Features..P. 94
Caring for Your Motorcycle.....P. 95
Storing Your Motorcycle .....P. 97
Transporting Your Motorcycle.....P. 98
You & the Environment.....P. 99
Serial Numbers .....P. 100
Fuels Containing Alcohol.....P. 101
Catalytic Converter.....P. 102

Keys

Ignition Key

Be sure to record the key number provided with the original keys and record it in this manual.
Store the spare key in a safe location.
To make a duplicate, take the spare key or the key number to your dealer.
If you lose all keys and the key number, the ignition switch assembly will probably have to be removed by your dealer to determine the key number.

A metal key holder may cause damage to the area surrounding the ignition switch.

Instruments, Controls, & Other Features

Ignition Switch

Leaving the ignition switch in the ON position with the engine stopped will drain the battery.

Do not turn the key while riding.

Odometer

The odometer returns to 0 when the read-out exceeds 99999.9.

Document Bag

The owner's manual, registration, and insurance information can be stored in the plastic document bag located on reverse side of the seat.

Caring for Your Motorcycle

Frequent cleaning and polishing is important to ensure the life of your Honda. A clean motorcycle makes it easier to spot potential problems.
In particular, seawater and salts used to prevent ice on roads promote the formation of corrosion. Always wash your motorcycle thoroughly after riding on coastal or treated roads.

Washing

Allow the engine, muffler, brakes, and other high-temperature parts to cool before washing.

1. Rinse your motorcycle thoroughly using a low pressure garden hose to remove loose dirt.
2. If necessary, use a sponge or a soft towel with mild cleaner to remove road grime.
   ▶ Clean the headlight lens, panels, and other plastic components with extra care to avoid scratching them. Avoid directing water into the air cleaner, muffler, and electrical parts.
3. Thoroughly rinse your motorcycle with plenty of clean water and dry with a soft, clean cloth.
4. After the motorcycle dries, lubricate any moving parts.
   ▶ Make sure that no lubricant spills onto the brakes or tyres. Brake discs or pads, drum or shoes contaminated with oil suffer greatly reduced braking effectiveness and can lead to a crash.
5. Lubricate the drive chain immediately after washing and drying the motorcycle.
6. Apply a coat of wax to prevent corrosion.
   ▶ Avoid products that contain harsh detergents or chemical solvents. These can damage the metal, paint, and plastic on your motorcycle.
   Keep the wax clear of the tyres and brakes.
   ▶ If your motorcycle has any mat painted parts, do not apply a coat of wax to the mat painted surface.

continued

Washing Precautions

Follow these guidelines when washing:

- Do not use high-pressure washers:
  - ▶ High-pressure water cleaners can damage moving parts and electrical parts, rendering them inoperable.
  - ▶ Water in the air intake can be drawn into the carburetor and/or enter the air cleaner.
- Do not direct water at the muffler:
  - ▶ Water in the muffler can prevent starting and causes rust in the muffler.
- Dry the brakes:
  - ▶ Water adversely affects braking effectiveness. After washing, apply the brakes intermittently at low speed to help dry them.
- Do not direct water under the seat:
  - ▶ Water in the under seat compartment can damage your documents and other belongings.
- Do not direct water at the air cleaner:
  - ▶ Water in the air cleaner can prevent the engine from starting.
- Do not direct water near the headlight:
  - ▶ The headlights' inside lens may fog temporarily after washing or while riding in the rain. This does not impact the headlight function.
  - ▶ Any condensation inside the headlight should dissipate after a few minutes of running the engine with the headlight(s) on. However, if you see a large amount of water or ice accumulated inside the lens(es), have your vehicle inspected by your dealer.
- Do not use wax or polishing compounds on mat painted surface:
  - ▶ Use a soft cloth or sponge, plenty of water, and a mild detergent to clean mat painted surfaces. Dry with a soft clean cloth.

Aluminium Components

Aluminium will corrode from contact with dirt, mud, or road salt. Clean aluminium parts regularly and follow these guidelines to avoid scratches:

- Do not use stiff brushes, steel wool, or cleaners containing abrasives.
- Avoid riding over or scraping against curbs.

Panels

Follow these guidelines to prevent scratches and blemishes:

- Wash gently using a soft sponge and plenty of water.
- To remove stubborn stains, use diluted detergent and rinse thoroughly with plenty of water.
- Avoid getting petrol, brake fluid, or detergents on the instruments, panels, or headlight.

Exhaust Pipe and Muffler

When the exhaust pipe and muffler are painted, do not use a commercially available abrasive kitchen cleaning compound. Use a neutral detergent to clean the painted surface on the exhaust pipe and muffler. If you are not sure if your exhaust pipe and muffler are painted, contact your dealer.

Storing Your Motorcycle

If you store your motorcycle outdoors, you should consider using a full-body motorcycle cover.

If you won't be riding for an extended period, follow these guidelines:

- Wash your motorcycle and wax all painted surfaces (except mat painted surfaces). Coat chrome pieces with rust-inhibiting oil.
- Lubricate the drive chain. ➔P. 44
- Place your motorcycle on its centre stand and position a block so that both tyres are off the ground.
- After rain, remove the body cover and allow the motorcycle to dry.

● Remove the battery (➡P. 50) to prevent discharge.
Charge the battery in a shaded, well-ventilated area.
▶ If you leave the battery in place, disconnect the negative ⊖ terminal to prevent discharge.

After removing your motorcycle from storage, inspect all maintenance items required by the Maintenance Schedule.

Transporting Your Motorcycle

If your motorcycle needs to be transported, it should be carried on a motorcycle trailer or a flatbed truck or trailer that has a loading ramp or lifting platform, and motorcycle tie-down straps. Never try to tow your motorcycle with a wheel or wheels on the ground.

NOTICE
Towing your motorcycle can cause serious damage to the transmission.

You & the Environment

Owning and riding a motorcycle can be enjoyable, but you must do your part to protect the environment.

Choose Sensible Cleaners

Use a biodegradable detergent when you wash your motorcycle. Avoid aerosol spray cleaners that contain chlorofluorocarbons (CFCs) which damage the atmosphere's protective ozone layer.

Recycle Wastes

Put oil and other toxic wastes in approved containers and take them to a recycling centre. Call your local or state office of public works or environmental services to find a recycling centre in your area, and to get instructions on how to dispose of non-recyclable wastes. Do not place used engine oil in the trash, or pour it down a drain or on the ground. Used oil, petrol, and cleaning solvents contain poisons that can hurt refuse workers and contaminate drinking water, lakes, rivers, and oceans.

Serial Numbers

The frame and engine serial numbers uniquely identify your motorcycle and are required in order to register your motorcycle. They may also be required when ordering replacement parts. You should record these numbers and keep them in a safe place.

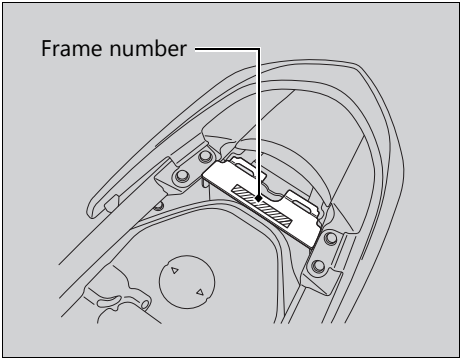

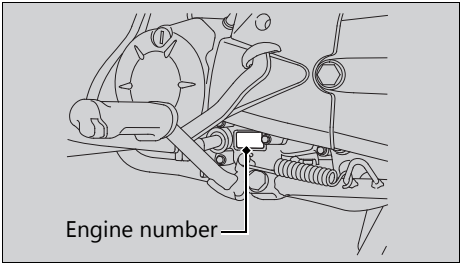

Fuels Containing Alcohol

Some conventional fuels blended with alcohol are available in some locales to help reduce emissions to meet clean air standards. If you plan to use blended fuel, check that it is unleaded and meets the minimum octane rating requirement.

The following fuel blends can be used in your motorcycle:

- Ethanol (ethyl alcohol) up to 10% by volume.
  ▶ Petrol containing ethanol may be marketed under the name Gasohol.

The use of petrol containing more than 10% ethanol may:

- Damage the painting of the fuel tank.
- Damage the rubber tubes of the fuel line.
- Cause corrosion of the fuel tank.
- Cause poor drivability.

NOTICE

Use of blended fuels containing higher than approved percentages can damage metal, rubber, plastic parts of your fuel system.

If you notice any undesirable operating symptoms or performance problems, try a different brand of petrol.

Catalytic Converter

This motorcycle is equipped with a three-way catalytic converter. The catalytic converter contains precious metals that serve as catalysts in high temperature chemical reactions that
convert hydrocarbons (HC), carbon monoxide (CO), and oxides of nitrogen (NOx) in the exhaust gasses into safe compounds.

A defective catalytic converter contributes to air pollution and can impair your engine's performance. A replacement unit must be an original Honda part or equivalent.

Follow these guidelines to protect your motorcycle's catalytic converter.

- Always use unleaded petrol. Leaded petrol will damage the catalytic converter.
- Keep the engine in good running condition.
- Have your motorcycle serviced if your engine is misfiring, backfiring, stalling, or otherwise not running properly, stop riding and turn off the engine.

Specifications

Main Components

Overall length	1,914 mm (75.4 in)	
Overall width	688 mm (27.1 in)	
Overall height	1,075 mm (42.3 in)	
Wheelbase	1,224 mm (48.2 in)	
Minimum ground clearance	142 mm (5.6 in)	
Caster angle	26° 30′	
Trail	67.8 mm (2.7 in)	
Curb weight	97 kg (214 lb)	
Maximum weight capacity *1	115 kg (254 lb)	
Maximum luggage weight *2	Luggage box	5 kg (11 lb)
Passenger capacity	Rider and 1 passenger	
Minimum turning radius	1.90 m (6.23 ft)	

*1 Including rider, passenger, all luggage, and accessories.
*2 Includes the weight of the luggage and added accessories.

Displacement	109 cm^3 (6.6 cu-in)	
Bore × stroke	50.000 × 55.597 mm (1.9685 × 2.1889 in)	
Compression ratio	9.0:1	
Fuel	Unleaded petrol Recommended: 91 RON or higher	
Fuel containing alcohol	ETHANOL up to 10% by volume	
Tank capacity	3.7 litres (0.98 US gal, 0.81 Imp gal)	
Battery	PTZ4V or YTZ4V or GTZ4V 12 V-3 Ah (10 HR)	
Gear ratio	1st	2.615
	2nd	1.555
	3rd	1.136
	4th	0.916
Reduction ratio (primary / final)	4.059 / 2.500	

Service Data

Tyre size	Front	70/90-17M/C 38P
	Rear	80/90-17M/C 50P
Tyre type		Bias-ply, tube
Recommended Tyres	Front	MBP MP-220 CHENG SHIN C-6016
	Rear	MBP MP-221 CHENG SHIN C-6016R
Tyre air pressure	Front	(Driver only) 200 kPa (2.00 kgf/cm², 29 psi) (Driver and passenger) 200 kPa (2.00 kgf/cm², 29 psi)
	Rear	(Driver only) 225 kPa (2.25 kgf/cm², 33 psi) (Driver and passenger) 280 kPa (2.80 kgf/cm², 41 psi)
Spark plugs	(standard)	CPR6EA-9S (NGK) U20EPR9S (DENSO)
Spark plug gap		0.8 to 0.9 mm (0.03 to 0.04 in)
Idle speed		1,400 ± 100 rpm
Recommended engine oil		Honda 4-stroke motorcycle oil API Service Classification SG or higher, excluding oils marked as "Energy Conserving" or "Resource Conserving," SAE 10W-30, JASO T 903 standard MA
Engine oil capacity	After draining	0.8 litres (0.8 US qt, 0.7 Imp qt)
	After disassembly	1.0 litres (1.1 US qt, 0.9 Imp qt)
Recommended drive chain lubricant	Drive chain lubricant. If not available, use SAE 80 or 90 gear oil.	
Drive chain slack	25 to 35 mm (1.0 to 1.4 in)	
Standard drive chain	KMC420JB DID420AD RK420SL	
Standard sprocket size	No. of links	102
	Drive sprocket	14T
	Driven sprocket	35T

■ Bulbs

Headlight	12 V-35/35 W
Brakelight/Taillight	12 V-18/5 W
Front turn signal light	12 V-10 W × 2
Rear turn signal light	12 V-10 W × 2

■ Fuses

Main fuse	10 A
Other fuse	7.5 A

■ Torque Specifications

Chain cover screw	7 N·m (0.7 kgf·m, 5.2 lbf·ft)
Engine oil drain bolt	24 N·m (2.4 kgf·m, 18 lbf·ft)
Front wheel axle nut	59 N·m (6.0 kgf·m, 44 lbf·ft)
Rear wheel axle nut	59 N·m (6.0 kgf·m, 44 lbf·ft)
Brake stopper arm nut	22 N·m (2.2 kgf·m, 16 lbf·ft)

Index

A
Accessories 10

B
Basic Operation Flow 12
Battery 39, 50
Brakelight Switch 67
Brakes
  Fluid 59
  Pad Wear 60
  Shoe Wear 66
Braking 7
Bulb
  Brakelight/Taillight 88
  Front Turn Signal 89
  Headlight 87
  Rear Turn Signal 90

C
Caring for Your Motorcycle 95
Catalytic Converter 102
Choke Lever 25
Compartment
  Document Bag 32, 94
  Tool 32, 49

D
Drive Chain 43, 69

E
Electrical Trouble 86
Engine
  Number 100
  Oil 42, 56
  Starting 24
Environment 99

F
Flooded Engine 26
Frame Number 100
Fuel
  Gauge 18
  Recommended 29
  Remaining 18
  Tank Capacity 29
  Valve 23

Fuels Containing Alcohol 101
Fuses 41, 91

G
Gasohol 101
Gear Position Indicators 19
Gear Range 18

H
Headlight Aim 76
Headlight Dimmer Switch 20
Helmet Holder 31
High Beam Indicator 19
Horn Button 20

I
Ignition Key 93
Ignition Switch 21, 25
Indicators 19
Instruments 18

L
Load Limits 11
Loading Guidelines 11
Luggage Box 32

M
Maintenance
  Fundamentals 38
  Importance 34
  Safety 34
  Schedule 35
Maximum Weight Limit 11
Modifications 10

N
Neutral Indicator 19

O
Odometer 18
Oil
  Engine 42, 56

P
Parking 8
Parts Location 14

Petrol 29, 101
Protective Apparel 6

R

Recommended
- Fuel 29
- Oil 42

Refuelling 29
Riding Precautions 7

S

Safety Precautions 6
Serial Numbers 100
Shifting Gears 27
Side Stand 68
Specifications 103
Speedometer 18
Start Button 20, 25
Starting the Engine 24
Steering Lock 21
Storage
- Document Bag 32, 94
- Equipment 31
- Luggage Box 32

Storing Your Motorcycle 97
Switches 20

T

Throttle 74
Tool 32, 49
Transporting Your Motorcycle 98
Troubleshooting 77
Turn Signal Indicators 19
Tyres
- Air Pressure 45, 104
- Puncture 79
- Replacing 45, 79

W

Washing Your Motorcycle 95
Weight Limit 11
Wheels
- Front Removal 80, 82
- Rear Removal 84

HONDA

The Power of Dreams

For Comments and Suggestions you may contact us at:

Honda Philippines, Inc.
Head Office & Manufacturing Plant
Lot 34 Phase 1 - B Road 3,
First Philippine Industrial Park,
Tanauan City 4234 Batangas
Tel. Nos. (632) 581-6700 to 99
Tel. Nos. (632) 756-7300 to 59
Email : customerservice@hondaph.com
Website: www.hondaph.com

32K89C000 HPI-EP

PRINTED IN THE PHILIPPINES